bay restoration authority

santa monica bay restoration authority ✒ 320 west 4th street, ste 200; los angeles, california 90013
213/576-6615 phone ✒ 213/576-6646 fax ✒ smbrc.ca.gov

NOTICE OF A MEETING OF THE
SANTA MONICA BAY RESTORATION AUTHORITY
GOVERNING BOARD

Date: Thursday, November 17, 2016
Time: 10:30 am

Location:
Edward C. Little Water Recycling Facility
1935 S. Hughes Way
El Segundo, CA 90245

AGENDA

1. Welcome and Introductions

2. Order of Agenda

3. Public Comment—Members of the public and representatives of organizations/agencies wishing to comment will be allowed up to three minutes to address the Authority and to provide public testimony on items not otherwise on the agenda. Speaker time may be reduced depending on the number of speakers.

4. Approval of Minutes from the September 7, 2016 Meeting

5. Consideration of Approval of Memorandum of Understanding with City of Los Angeles Department of Airports (dba Los Angeles World Airports)

6. Member Comment—Governing Board members may wish to comment on issues not otherwise on the agenda.

7. Adjournment

For additional information concerning the meeting, please contact Scott Valor at 808-631-6118 or by e-mail at svalor@santamonicabay.org .

If any individual requires a disability-related modification or accommodation to attend or participate in the meeting, please contact Scott Valor at 808-631-6118 at least 3 days prior to the meeting.

SANTA MONICA BAY RESTORATION AUTHORITY

Board Meeting Minutes

September 7, 2016

Location:
Del Rey Yacht Club
13900 Palawan Way
Marina del Rey, CA 90292

The meeting was convened at 12:37 a.m. John Sibert chaired the meeting.

Introductions took place.

Public Comment:
Walter Lamb from the Ballona Wetlands Land Trust commented about ice plant removal at Ballona Wetlands. Lamb expressed hope to resolve legal issues surrounding the Commission and complained about lack of information. Lamb also spoke about his desire for more collaboration and communication on the part of the Commission.

Order of the Agenda:
SMBRA's Executive Officer Tom Ford spoke about tabling the agenda item, consideration of approval of the LAWA MOU, needed further review by legal counsel.

Member comments:
John Sibert announced that he will be termed out of office at the end of November.

Adjournment
12:44 p.m.

Attending members: Dana Murray, Frank Wu, Timothy Lippman, John Sibert, Gloria Gray
Absent members: None
Attending staff: Ford, Wang, Villagomez

General public:
Walter Lamb, Ballona Wetlands Land Trust
Tamara McCrossen-Orr, Los Angeles World Airports

bay restoration authority

STEWARDS OF SANTA MONICA BAY

santa monica bay restoration authority ✒ 320 west 4th street, ste 200; los angeles, california 90013
213/576-6615 phone ✒ 213/576-6646 fax ✒ santamonicabay.org

November 10, 2016 **Agenda Item #5**

To: Governing Board, Santa Monica Bay Restoration Authority (SMBRA)

From: Tom Ford, Executive Director

Re: Memorandum of Understanding (MOU) with Los Angeles World Airports (LAWA)

<u>Action Requested of the Governing Board</u>:

- Re-Approve the SMBRA MOU with LAWA

Background

The SMBRA was created by a joint exercise of powers agreement between the Santa Monica Bay Restoration Commission (SMBRC) and the Los Angeles County Flood Control District (FCD) and operates as a local public agency within the Santa Monica Bay Watershed and the jurisdictional boundaries of the SMBRC and the FCD with the purpose of broadening funding opportunities for projects within the Santa Monica Bay.

The SMBRA was approached by the City of Los Angeles Department of Airports (dba Los Angeles World Airports (LAWA)) to collaborate on a multi-year project to restore and enhance natural dune habitats on Los Angeles International Airport (LAX) property. The attached MOU specifically identifies the relationship between the entities, the scope of work, and the budget. The SMBRA will use The Bay Foundation staff specifically assigned to the SMBRC for this project, along with partner entities to be identified at a later time and via competitive RFP processes if required. .

The SMBRA Board of Directors approved its Fiscal Year 2016 and 2017 budgets at its February 2016 meeting in anticipation of the preparation and finalization of the MOU.

The action requested of the SMBRA Governing Board is a re-approval of the MOU due to the request of LAWA to use a different City of LA template for the MOU. No changes have been made to the version that was considered at the September 7, 2016 meeting except for minor changes to the dates of deliverables.

Project Description

As noted above, the goal of this newly-proposed project is to restore and enhance the natural habitats and implement effective long-term habitat management at LAX dunes through collaboration between LAWA and the SMBRA. LAWA and the SMBRA will mutually benefit from this cooperation with sharing of costs and resources as the project will greatly advance the goals and objective called for by the Bay Restoration Plan as

well as various restoration and management plans of the dune habitats adopted over the years by LAWA. The project also provides for research opportunities, community involvement and environmental awareness and stewardship, youth and workforce development, rare species and habitat preservation and enhancement, conducted in a manner to ensure safe airport operations.

The project is consistent with, and will advance the mission of the FCD by educating the public about the FCD's efforts to improve water quality in the Santa Monica Bay. The FCD owns and operates 21 storm drain low-flow diversion (LFD) structures throughout Santa Monica Bay to redirect urban runoff from storm drains for treatment at a nearby waste water treatment plant. The Westchester LFD takes urban runoff from a storm drain that runs underneath the Dunes Restoration Project site and diverts it to the Hyperion Plant for treatment. The public education component of the Dunes Restoration Project will include educational messages for urban and stormwater runoff pollution prevention and the role of the LFDs in this context.

MEMORANDUM OF UNDERSTANDING

BETWEEN

THE CITY OF LOS ANGELES AND

THE SANTA MONICA BAY RESTORATION AUTHORITY

FOR

CONSULTANT SERVICES RELATED TO

LAWA'S COASTAL DUNES IMPROVEMENT PROJECT

AT

LOS ANGELES INTERNATIONAL AIRPORT

MEMORANDUM OF UNDERSTANDING

BETWEEN

THE CITY OF LOS ANGELES

AND

THE SANTA MONICA BAY RESTORATION AUTHORITY

This Memorandum of Understanding (MOU) is made and entered into this ____day of _____2016, by and between the CITY OF LOS ANGELES, a municipal corporation, acting by order of and through its Department of Airports, Board of Airport Commissioners (hereinafter referred to as "City" or "LAWA[1]") on the one hand, and THE SANTA MONICA BAY RESTORATION AUTHORITY, a Joint Powers Authority formed between The Santa Monica Bay Restoration Commission and The Los Angeles County Flood Control District, organized under the laws of the State of California (hereinafter referred to as "SMBRA" or "Consultant") on the other, collectively referred to herein as "the Parties."

R E C I T A L S

WHEREAS, California Coastal Commission Coastal Development Permit No. 5-12-263 (attached hereto as Exhibit E and referred to herein as "Permit No. 5-12-263") permitted LAWA's Coastal Dunes Improvement Project (hereinafter referred to as the "CDIP"); and

WHEREAS, the CDIP allows the removal of selected abandoned streets covering approximately four (4) acres, reducing non-native invasive plants, and planting approximately six (6) acres of native coastal dune and coastal prairie vegetation within a 48-acre site in the northern portion of the dunes at 8901 S. Pershing Street, El Segundo Dunes, Los Angeles (hereinafter referred to as the "CDIP Area"); and

WHEREAS, Permit No. 5-12-263 requires (1) an ecological landscaping plan for the CDIP Area approved by the Coastal Commission; (2) submission of a monitoring report to the Coastal Commission assessing whether the on-site landscaping is in conformance with the approved ecological landscaping plan five (5) years from the date of issuance of the Permit; (3) submission of revised or supplemental landscaping plans, should the monitoring report indicate that the on-site landscaping is not in conformance with the approved ecological landscaping plan; and (4) a plan for erosion and drainage control approved by the Coastal Commission; and

[1] LAWA is the abbreviation for Los Angeles World Airports which refers to the City of Los Angeles Department of Airports.

WHEREAS, LAWA is responsible for City compliance with Permit No. 5-12-263; and

WHEREAS, LAWA published and the Coastal Commission approved the Ecological Landscape Plan for the Los Angeles International Airport Coastal Dunes Improvement Project in April 2013 (hereinafter referred to as the "Ecological Landscape Plan"), and a copy of the approved Plan is attached hereto as Exhibit F; and

WHEREAS, City wishes to retain Consultant to provide professional environmental technical and expert professional consulting services (referred to herein as "Services") as requested by LAWA, and as described by the Scope of Work and Deliverables attached to this MOU as Exhibit "A"; and

WHEREAS, Consultant has represented it is an expert and is engaged in the business of performing such Services; and

WHEREAS, LAWA will designate its representative(s) to work with Consultant, and thereupon it will be incumbent upon Consultant to, at all times, keep LAWA's designated representative(s) fully informed of all MOU/Services-related activities;

NOW THEREFORE, in consideration of the terms, covenants and conditions hereinafter contained to be kept and performed by the respective parties hereto, **IT IS HEREBY AGREED AS FOLLOWS**:

Section 1.0 <u>Definitions</u>.

It is understood that when the following words and phrases are used herein, each shall have the meaning set forth as follows:

BOARD: The Board of Airport Commissioners of the City of Los Angeles.

CEO: Chief Executive Officer of LAWA or his or her duly authorized designee.

SERVICES: All professional environmental technical and expert services requested by LAWA as defined by the attached Exhibit A, "Scope of Work" and "Deliverables."

Section 2.0 <u>Incorporated by Reference.</u>

It is expressly understood and agreed that the following exhibits are incorporated into and made a material part of this MOU:

Exhibit A: Scope of Work and Deliverables

Exhibit B: Lump Sum Compensation Schedule

Exhibit C: First Source Hiring Program

Exhibit D: Insurance Requirements

Exhibit E: Coastal Development Permit No. 5-12-263

Exhibit F: Ecological Landscape Plan

Exhibit G: Consultant/Contractor Relocation and Travel Policy

Section 3.0 Term of MOU.

The term of this MOU shall be for a period of three (3) years commencing upon the date the last Party executes the MOU, subject however, to earlier termination pursuant to the terms of this MOU. LAWA may terminate this MOU without cause and without liability for damages, upon giving Consultant a thirty (30) day advance written notice or as otherwise provided herein.

Section 4.0 Consultant's Fee.

4.1. For all services rendered under this MOU, all costs, direct or indirect, and all expenses incurred by Consultant pursuant to this MOU, City shall pay Consultant on a quarterly basis, after submission of deliverables set forth in Exhibit A, the corresponding lump sum amount set forth in Exhibit B Lump Sum Compensation Schedule; or on a mutually agreed-upon alternate task order/lump sum basis. City shall not pay any additional sums or supplemental rates of pay for "overtime" unless otherwise expressly provided for in Exhibit B. LAWA will not pay for any sub-consultant markup.

4.2. Regardless of any other provision of this MOU, it is understood and agreed that the total sum to be paid by City to Consultant for all of Consultant's Services, as described in Section 6.0 herein, and as further described/defined in Exhibit B hereto, shall not exceed the amount of Two Hundred Fifty Thousand Dollars ($250,000).

4.3. City shall not be required to make payments for work not yet performed, nor for work deemed unsatisfactory by City. The parties agree that the CEO, or his/her authorized designee, shall make the final determination as to when Consultant's services, or any part thereof, have been satisfactorily performed or completed to justify release of any given payment to Consultant under this MOU.

Section 5.0 Payment of Consultant's Fee.

5.1. Consultant shall submit a separate request for payment as set forth in Exhibit B, following Consultant providing the corresponding deliverable set forth in Exhibit A. Each request for payment shall contain a cumulative total of all billings, and shall identify the billing

applicable to each task of Consultant's Services. Within 30 days from receipt of LAWA's payment, Consultant shall pay its sub-consultants for services provided by the sub-consultants for the billing period for which payment was received. Within 60 days of: (i) the expiration of the MOU; or (ii) any early termination of the MOU, Consultant shall deliver to LAWA all unpaid invoices. LAWA shall have no liability or obligation for any services that have not been invoiced within 60 days after the completion of all work or expiration or termination of the MOU.

5.2. City reserves the right to request the use of specific billing templates supplied by LAWA and any additional substantiation regarding any request for payment if the CEO considers such additional substantiation to be in the best interests of City. City will process each request for payment, following City's normal procedure, upon approval of the request for payment by CEO.

5.3. All payment requests submitted by Consultant for Services (performed by Consultant, its sub-consultants or both) shall be certified by a duly authorized and knowledgeable officer of Consultant in a statement containing the following:

> *"I certify, under penalty of perjury, under the laws of the State of California, that to the best of my knowledge and belief, the above bill/invoice is just, true and correct according to the terms of this MOU, and that payment therefore has not been received."*

Invoices are to be mailed to:

Los Angeles World Airports
Environmental Programs Group
7301 World Way West 7th Floor
Los Angeles CA 90045
Atten: Invoice Processing

With an electronic copy to EPGInvoice@Lawa.org

5.4. Consultant shall perform a thorough Quality Assurance (QA)/Quality Control (QC) of each invoice, including all sub-consultant invoices, prior to submitting the same to LAWA. Administrative support costs for the preparation of invoices are not chargeable to LAWA. If an error discovered in the invoicing is brought to the Consultant's attention during the review cycle, the Consultant will have no more than 5 business days to correct any issues or provide adequate level of support documentation in order to keep the invoice in process. Should the correction not be made in the time specified, the charges will be removed and the invoices

short paid. Should the charges be supported after the deadline they may be resubmitted for consideration.

5.5. Unless otherwise specifically directed by the CEO, Consultant shall, for each invoice, submit summaries of costs and consultant and sub consultant services provided during that period included in that invoice. Consultant shall maintain, in a form subject to audit, and in accordance with generally accepted accounting principles, backup documentation to support all entries in each submitted billing statement. Such documentation shall be readily made available to the City, and to its duly authorized representative(s), upon request by the CEO.

5.6. City, the Federal Aviation Administration (FAA), the Comptroller General of the United States, or any of their duly authorized representatives, shall have access to any books, documents, papers and records, of Consultant, and/or of Sub-Consultants, which are directly pertinent this MOU, for the purpose of making audits, examinations, excerpts and transcriptions. Consultant shall maintain "records", including, but not limited to, books, documents, accounting procedures and practices, and other data, regardless of type and regardless of whether such items are in written form, in the form of computer data, or in any other form, sufficient to properly reflect all costs claimed to have been incurred under this MOU. Consultant shall make available to the City and to the Comptroller General, upon request and within a reasonable time, such records, materials and other evidence described herein for examination, audit or reproduction. Such records related to this MOU work shall be maintained and made available by Consultant for three (3) years after final payment on, final termination settlement of, or final dispute resolution of, this MOU, whichever is later. To the extent that an audit by the City, City's independent auditors, or their designees discloses excess charges inaccurately or improperly invoiced or allocated to this MOU by the Consultant or its Sub-Consultants, Consultant agrees to remit the amount of the overpayment to the City upon demand. If such audit discloses an overcharge of two percent (2%) or more of the total amount invoiced to the City for any year audited, and such audit is correct, Consultant shall pay the actual cost of such audit, which cost, in the case of audits conducted by City's auditors or City using in house staff, shall be computed on the basis of two (2) times the direct payroll of the audit staff completing the audit and audit report. Should audit disclose an underpayment to Consultant, City shall promptly remit the amount of the underpayment to the Consultant. The foregoing obligations to pay in the event of an overcharge do not apply to errors discovered in the processing of Applications for Payment in the ordinary course of business. Consultant shall include, in any and all Sub-Consultant agreements under this MOU that exceed One Hundred Thousand Dollars ($100,000.00), a provision setting forth the record retention requirements specified in this paragraph.

5.7 LAWA shall pay consultant’s fee by check, made payable to Santa Monica Bay Restoration Authority, and mailed to:

Department of Public Works
Fiscal Division
900 South Freemont Ave
Alhambra CA 91803
Attention Emilia Chlebek

Section 6.0 <u>Work/Services to be Performed by Consultant.</u>

6.1. Scope of Work/Services. Consultant agrees to perform all Work/Services in strict compliance with Exhibit A.

6.2. Incidental Work. It is expressly understood and agreed that Consultant shall perform all incidental work required to complete the Services as described in the Scope of Work and Deliverables attached hereto as Exhibit A, including work which is required to furnish final, finished and detailed Work consistent with and fulfilling the intent of the MOU Documents. All such incidental work shall not be considered extra work for which additional compensation can be claimed by Consultant. Such incidental work is presumed to be included in the Lump Sum Compensation Schedule set forth in Exhibit B.

6.3. Deliverables. In its performance of the Work/Services, the Consultant agrees to provide any Deliverables set forth in Exhibit A, Scope of Work and Deliverables.

6.4. During the term of this MOU, Consultant shall, at all times, comply with all applicable laws, rules and regulations, of any and all City, State and Federal agencies, including, but not limited to, the FAA, TSA, the Department of Transportation (DOT), which may have jurisdiction over, or be concerned with, the programming and planning of Program tasks/Projects. Consultant shall work with the City in resolving any conflicting legal authorities and/or requirements: however, to the extent resolution of conflicts is not possible, the City's determination will be final.

6.5. If a change in the applicable laws, rules or regulations causes an increase in the scope of work or services to be performed by Consultants set forth in Exhibit A, Scope of Work and Deliverables, then the parties hereto shall agree upon additional compensation, if any, to be paid to Consultant, therefore, and Exhibits A and B shall be amended, if authorized, in writing, by the CEO prior to the performance by Consultant of the increased work or service.

6.6 LAWA will designate its representative(s) to work with Consultant, and thereupon Consultant shall, at all times, keep LAWA's designated representative(s) fully informed of all of Consultant's activities that relate to the Services.

6.7 All costs due to the fault or negligence of the Consultant, including but not limited to correcting work product or invoices shall be borne by the Consultant.

6.8 LAWA shall determine the level of badging necessary for Consultant and sub-consultants. Consultant and sub-consultants shall be responsible for all costs associated with badging, escorting and obtaining access to the Dunes associated with the work to be performed under this MOU.

Section 7.0 Tasks.

7.1. Any Services to be provided by Consultant shall only be performed pursuant to the Scope of Work and Deliverables set forth in Exhibit A.

7.2. All travel must comply with LAWA's Consultant/Contractor Relocation & Travel Reimbursement Policy (Exhibit G).

7.3. Any and all amendments to the Scope of Work and Deliverables set forth in Exhibit A shall be in writing and signed by the CEO and the Consultant.

7.4. This is a non-exclusive MOU and the City and LAWA are only obligated to Consultant for the scope and amount authorized in Exhibits A and B.

7.5. Consultant will not be compensated for work not authorized in writing.

7.6 Consultant will not be compensated for tasks performed by volunteers.

Section 8.0 Time Periods for Completion of Consultant's Services.

8.1. It is understood and agreed that time is of the essence in the performance of each task(s), and phases within each task(s), under this MOU. The services and any defined deliverables shall be completed and delivered to the CEO in a prompt and timely fashion so as to permit the effective review and employment of the deliverables by LAWA during and throughout the performance of the Project.

8.2. The time during which Consultant is delayed in its work by acts of God, which Consultant could not reasonably have foreseen and provided for, and which are not caused by, or the continuance of which are not due to, any fault or negligence on the part of Consultant, shall be added to the applicable period for completion of Consultant's services under this MOU, but City shall not be liable to Consultant for any damages on account of any such delay(s).

Section 9.0 Notices. All notices shall be in writing and addressed as follows:

9.1. Notices to City, the CEO, and to the City Attorney of the City of Los Angeles shall, until Consultant's receipt of written notice otherwise from these parties, be addressed to said parties at:

Los Angeles World Airports
Environmental Programs Group
7301 World Way West, 7th Floor
Los Angeles CA, 90045
Atten: Contracts & Procurement

With an electronic copy to:
RFreeman@lawa.org and blingat@lawa.org

and

Los Angeles City Attorney
1 World Way
Los Angeles, CA 90045

9.2. Notices to Consultant shall, until City's receipt of written notice otherwise from Consultant, be addressed to Consultant at:

Tom Ford
Executive Officer
Santa Monica Bay Restoration Authority
320 W. Fourth Street Suite 200
Los Angeles CA 90013
Atten: Marcello Villagomez

With an electronic copy to Mvillagomez@waterboards.ca.gov

9.3. All such notices may either be delivered personally to the CEO or to the Office of the City Attorney, Airports Division, in the one case, or to Consultant in the other case, or may be deposited in the United States mail, properly addressed as aforesaid with postage fully prepaid for delivery by certified or registered mail, and shall be effective upon receipt.

9.4. The execution of any such notice(s) by CEO shall be as effective as to Consultant as if it were executed by the Board, or by Resolution or Order of the Board, and Consultant shall not question the authority of CEO to execute any such notice(s).

Section 10.0 Independent Contractor.

In furnishing the services provided for herein, Consultant is acting as an independent contractor, and is in no respects to be considered an officer, employee, servant or agent of City.

Section 11.0 Standard of Care.

Consultant's professional services rendered in the performance of this MOU shall conform to the generally accepted professional standards of a specialist in the designated professional fields in the State of California.

Section 12.0 Failure to Provide Prompt, Efficient and Thorough Services.

If, in the opinion of the CEO, Consultant fails to provide prompt, efficient and thorough services, or if Consultant fails to complete its work within the time periods provided, City shall have the right to cancel this MOU, and pay Consultant therefore in accordance with the provisions of Section 13.0, "Abandonment of Project, Cancellation of MOU or Suspension of Services."

Section 13.0 Abandonment of Project, Cancellation of MOU or Suspension of Services.

13.1. If, at any time, LAWA, for any reason, decides to terminate this MOU, or any part thereof, the CEO may terminate Consultant's services set forth in the MOU Exhibit A Scope of Work and Deliverables by providing written notice of the termination pursuant to Section 9.0 above. In such case, Consultant shall immediately stop all services as directed in the written termination notice. The CEO may terminate the MOU in its entirety upon giving Consultant a thirty (30) day written notice prior to the effective date of such termination, which date shall be specified in such notice. Upon receipt of the Notice, Consultant shall immediately cease all activity except for that activity expressly authorized by the Notice.

13.2. In the event this MOU, or any portion hereof, and/or Consultant's services, or any portion thereof, is terminated by City, City shall only pay Consultant the amount due to the Consultant for services provided up to the termination date.

13.3. City shall not be liable for the cost of work performed, nor for expenses incurred, subsequent to the date specified by City in the written notice to terminate.

13.4. CEO may, at any time, upon written order to Consultant, require Consultant to stop all, or any part, of the services called for by this MOU for a period of thirty (30) days. The thirty (30) day period shall commence on the day the written order is delivered to Consultant, and shall further be extended for any period to which the parties may agree. Any such order shall be specifically identified as a "Stop Work Order" issued pursuant to this clause. Upon receipt of such an Order, Consultant shall forthwith comply with its terms. Within a period of thirty (30) days after a Stop Work Order is delivered to Consultant, or within any extension of that period to which the parties have agreed, City shall either:

(a) Cancel the Stop Work Order; or

(b) Terminate the services as provided in Section 13.1 hereof.

13.5. If a Stop Work Order issued under this Section is cancelled or expires, or the period of any extension thereof is cancelled or expires, Consultant shall not resume work until the Stop Work Order has been retracted in writing by LAWA. Upon retrieval of the Stop Work Order an equitable adjustment will thereafter be made for Consultant's time of performance, Consultant's compensation, or both, consistent with the provisions of Section 7.0 of this MOU, if:

(a) The Stop Work Order results in an increase in the time required for, or in Consultant's cost properly allocable to, the performance of services under this MOU; and

(b) Consultant asserts a claim for such adjustment within thirty (30) days after the end of the period of work stoppage; provided, however, that City may investigate any facts relating to any such claim.

13.6. If a Stop Work Order is not cancelled or retracted, and the services covered by such order are terminated for the convenience of City, no costs resulting from said Stop Work Order shall be allowed.

13.7. It is understood and agreed that should City decide that any portion of the Consultant's services shall be suspended or terminated, this MOU shall continue to apply to that portion or those portions not suspended or terminated, and that such suspension or termination of a portion of Consultant’s services shall in no way make void or invalid this MOU as to that portion, or those portions, not suspended or terminated.

13.8. All finished or unfinished documents and materials produced or procured under this MOU, including all intellectual property rights thereto, shall become City property upon date of such termination unless noted otherwise in Exhibit A, Scope of Work and Deliverables. Consultant agrees to execute any documents necessary for the City to perfect, memorialize, or record the City's ownership of rights provided herein. This Section shall survive termination of this MOU.

Section 14.0 <u>Nondiscrimination and Affirmative Action Program.</u>

14.1. Consultant, in the performance of this MOU, agrees and obligates itself not to discriminate in its employment practices against any employee or applicant for employment because of the employees or applicant's race, religion, national origin, ancestry, sex, sexual orientation, age, physical handicap, marital status, domestic partner status, or medical condition.

14.2. All subcontracts awarded under this MOU shall contain similar provisions acceptable to City.

14.3. Consultant also agrees to comply with the provisions of Article 3 of Chapter 1, Part 7, Division 2 of the Labor Code of the State of California and all other applicable statutes, ordinances and regulations relative to employment, wages and hours of labor.

Section 15.0 <u>First Source Hiring Program for Airport Employers (LAX Only).</u>

15.1 Consultant shall comply with the applicable provisions of the First Source Hiring Program adopted by the Board. The rules, regulations, requirements, and penalties of the First Source Hiring Program are attached hereto as Exhibit "C" and made a material term of this MOU.

Section 16.0 <u>Living Wage and Service Contract Worker Retention Requirements.</u>

16.1. Living Wage Ordinance. Consultant expressly agrees, as a part of its obligations under this MOU, to require its subconsultants to comply with the terms of the Living Wage Ordinance as set forth in Los Angeles Administrative Code Section 10.37, et seq., including any future amendments thereto.

16.2. Service Contractor Worker Retention Ordinance. Consultant expressly agrees, as part of its obligations under this MOU, to comply with the terms of the Service Contract Worker Retention Ordinance as set forth in the Los Angeles Administrative Code Section 10.36, et seq., including any future amendments thereto.

16.3. No Retaliation. Consultant shall not retaliate against any employee lawfully asserting noncompliance with the provisions of either the Living Wage Ordinance or the Service Contract Worker Retention Ordinance.

16.4. City Remedies. Consultant's violation of the Living Wage Ordinance or Service Contract Worker Retention Ordinance shall be deemed to be a breach of this MOU, for which City shall be entitled to pursue all remedies available under law, including, but not limited to, termination of this MOU.

16.5. Pledge of Consultant. Consultant hereby pledges, and shall require each of its subcontractors/sub-consultants within the meaning of the Living Wage Ordinance as respects this MOU, to pledge to and to comply with the terms of Federal law proscribing retaliation for union organizing. Consultant shall deliver the executed pledges from each such subcontractor/sub-consultant to City within ninety (90) days of the execution of this MOU. Consultant's delivery of executed pledges from each such subcontractor/sub-consultant shall fully discharge Consultant's obligations with respect to such pledges, and shall fully discharge

the obligation of the Consultant and the Subcontractor/Sub-consultants to comply with the provisions in the Living Wage Ordinance, contained in Section 10.37.6(c), concerning compliance with such Federal law.

16.6. Subcontractor/Subconsultant Compliance. Consultant agrees to include, in every subcontract entered into between Consultant and any Subcontractor/Sub-consultant under this MOU, a provision pursuant to which such Subcontractor/Sub-consultant: (1) agrees to comply with the Living Wage Ordinance and the Service Contract Worker Retention Ordinance with respect to this MOU; (2) agrees not to retaliate against any employee lawfully asserting noncompliance on the part of the Subcontractor/Sub-consultant with the provisions of either the Living Wage Ordinance or the Service Contract Worker Retention Ordinance; and (3) agrees and acknowledges that City, as the intended third party beneficiary of this provision may (a) enforce the Living Wage Ordinance and Service Contract Worker Retention Ordinance directly against the Subcontractor/Sub-consultant with respect to this MOU, and (b) invoke, directly against the Subcontractor/Sub-consultant with respect to the MOU, all the rights and remedies available to City under Section 10.37.5 of the Living Wage Ordinance and Section 10.36.3 of the Service Contract Worker Retention Ordinance, as same may be amended from time to time.

Section 17.0 <u>Equal Benefits Ordinance (EBO).</u>

17.1. Unless otherwise exempt in accordance with the provisions of the Equal Benefits ("EBO") Ordinance, this MOU is subject to the applicable provisions of EBO Section 10.8.2.1 of the Los Angeles Administrative Code, as amended from time to time.

17.2. During the term of this MOU, Consultant certifies and represents that the Consultant will require its subconsultants to comply with the EBO. Furthermore, Consultant agrees to post the following statement in conspicuous places at its place of business available to employees and applicants for employment:

"During the term of a MOU with the City of Los Angeles, the Consultant will provide equal benefits to employees with spouses and its employees with domestic partners. Additional information about the City of Los Angeles' Equal Benefits Ordinance may be obtained from the Department of Public Works, Bureau of Contract Administration, Office of Contract Compliance at (213) 847-6480."

Section 18.0 <u>Child Support Orders.</u>

Consultant expressly agrees, as part of its obligations under this MOU, to require its sub-consultants to comply with the terms of the Child Support Assignment Orders Ordinance as set forth in Los Angeles Administrative Code Section 10.10, et seq., Ordinance No. 172,401, including any future amendments thereto.

Section 19.0 Prevailing Wage Compliance.

Consultant agrees that Construction work performed as part of this MOU may require payment of prevailing wages, and Consultant is obligated to make that determination. Consultant shall be bound by and comply with applicable provisions of the California Labor Code and Federal, State, and local laws related to labor. Consultant shall indemnify and pay or reimburse City for any damages, penalties or fines and interest (including, but not limited to, attorney's fees and costs of litigation) that City incurs, or pays, as a result of noncompliance with applicable prevailing wage laws in connection with the Consultant work.

Section 20.0 Insurance.

20.1. Consultant shall procure at its expense, and keep in effect at all times during the term of this MOU, the types and amounts of insurance specified on Insurance Exhibit "D", attached hereto and incorporated by reference herein. The specified insurance (except for Workers' Compensation and professional Liability) shall also, by endorsement to the policies, include and insure City, its Department of Airports, its Board and all of City's officers, employees and agents, their successors and assigns, as additional insured, against the areas of risk described on Insurance, Exhibit "D", hereof with respect to Consultant's acts or omissions in its operations, use, and occupancy of the Airports owned and operated by the Department (hereinafter referred to as "Airport") or other related functions performed by or on behalf of Consultant in, on or about the Airport.

20.2. Waiver of Subrogation. For commercial general liability insurance, workers' compensation insurance, and employer's liability insurance, the insurer shall agree to waive all rights of subrogation against City for Losses arising from activities and operations of Consultant insured in the performance of Services under this MOU.

20.3. Each specified insurance policy (other than Workers' Compensation and Employers' Liability) shall contain a Severability of Interest (Cross Liability) clause which states, "It is agreed that the insurance afforded by this policy shall apply separately to each insured against whom claim is made, or suit is brought, except with respect to the limits of the company's liability." Additionally, Consultant's Commercial General Liability policy ("Policy") shall provide Contractual Liability Coverage, and such insurance as is afforded by the Policy shall also apply to the tort liability of the City of Los Angeles assumed by the Consultant under this MOU.

20.4. Sub-consultants. Consultant shall include all of its Sub-consultants as insured under its policies or shall furnish separate certificates and endorsements for each Sub- consultant. All coverage for Sub-consultants shall be subject to all of the requirements stated herein unless otherwise agreed to in writing by CEO and approved as to form by the City Attorney.

20.5. All such insurance shall be primary and noncontributing with any other insurance held by City's Department of Airports where liability arises out of, or results from, the acts or omissions of Consultant, its agents, employees, officers, invitees, assigns, or any person or entity acting for, or on behalf of, Consultant.

20.6. Such policies may provide for reasonable deductibles and/or retentions acceptable to the CEO, based upon the nature of Consultant's operations and the type of insurance involved.

20.7. City shall have no liability for any premiums charged for such coverage(s). The inclusion of City, its Department of Airports, its Board, and all of its officers, employees and agents, and their agents and assigns, as additional insured, is not intended to, and shall not, make them, or any of them, a partner or joint venture of Consultant in its operations at the Airport.

20.8. In the event Consultant fails to furnish City evidence of insurance, or to maintain the insurance as required under this Section, City, upon ten (10) days' prior written notice to Consultant of its intention to do so, shall have the right to secure the required insurance at the cost and expense of Consultant, and Consultant agrees to promptly reimburse City for the cost thereof, plus fifteen percent (15%) for administrative overhead.

20.9. At least ten (10) days prior to the expiration date of any of the above policies, documentation showing that the insurance coverage has been renewed or extended shall be filed with the City. If any such coverage is cancelled or reduced, Consultant shall, within fifteen (15) days of such cancellation or reduction of coverage, file with City evidence that the required insurance has been reinstated, or is being provided through another insurance company or companies.

20.10. Consultant shall provide proof of all specified insurance and related requirements to City either by production of the actual insurance policy(ies), by use of City's own endorsement form(s), by broker's letter acceptable to Executive Director in both form and content in the case of foreign insurance syndicates, or by other written evidence of insurance acceptable to CEO. The documents evidencing all specified coverage shall be filed with City prior to the Consultant performing the Services hereunder. Such documents shall contain the applicable policy number(s), the inclusive dates of policy coverage(s), the insurance carrier's name(s), and they shall bear an original or electronic signature of an authorized representative of said carrier(s), and they shall provide that such insurance shall not be subject to cancellation, reduction in coverage or non-renewal, except after the carrier(s) and the Consultant provide actual, written notice (by Certified Mail) to the City Attorney of the City of Los Angeles at least thirty (30) days prior to the effective date thereof.

20.11. City and Consultant agree that the insurance policy limits specified in this Section shall be reviewed for adequacy annually throughout the term of this MOU by the CEO, who may

thereafter require Consultant to adjust the amount(s) of insurance coverage(s) to whatever amount(s) CEO deems to be adequate. City reserves the right to have submitted to it, upon request, all pertinent information about the agent(s) and carrier(s) providing such insurance.

Section 21.0 <u>City Held Harmless.</u>

21.1 To the fullest extent permitted by law, Consultant shall defend, indemnify and hold harmless City and any and all of City's Boards, officers, agents, employees, assigns and successors in interest from and against any and all suits, claims, causes of action, liability, losses, damages, demands or expenses (including, but not limited to, attorney's fees and costs of litigation), claimed by anyone (including Consultant and/or Consultant's agents or employees) by reason of injury to, or death of, any person(s) (including Consultant and/or Consultant's agents or employees), or for damage to, or destruction of, any property (including property of Consultant and/or Consultant's agents or employees) or for any and all other losses, founded upon or alleged to arise out of, pertain to, or relate to the Consultant's and/or Sub-Consultant's performance of the Contract, whether or not contributed to by any act or omission of City, or of any of City's Boards, officers, agents or employees; Provided, however, that where such suits, claims, causes of action, liability, losses, damages, demands or expenses arise from or relate to Consultant's performance of a "Construction Contract" as defined by California Civil Code Section 2783, this paragraph shall not be construed to require Consultant to indemnify or hold City harmless to the extent such suits, causes of action, claims, losses, demands and expenses are caused by the City's sole negligence, willful misconduct or active negligence; Provided further that where such suits, claims, causes of action, liability, losses, damages, demands or expenses arise from Consultant's design professional services as defined by California Civil Code Section 2782.8, Consultant's indemnity obligations shall be limited to allegations, suits, claims, causes of action, liability, losses, damages, demands or expenses arising out of, pertaining to, or relating to the Consultant's negligence, recklessness or willful misconduct in the performance of the MOU.

21.2. In addition, and consistent with the requirements of Section 24.6 below, Consultant agrees to protect, defend, indemnify, keep and hold harmless City, including its Boards, Departments and City's officers, agents, servants and employees, from and against any and all claims, damages, liabilities, losses and expenses arising out of any threatened, alleged or actual claim that the end product provided to LAWA by Consultant violates any patent, copyright, trade secret, proprietary right, intellectual property right, moral right, privacy, or similar right, or any other rights of any third party anywhere in the world. Consultant agrees to, and shall, pay all damages, settlements, expenses and costs, including costs of investigation, court costs and attorney's fees, and all other costs and damages sustained or incurred by City arising out of, or relating to, the matters set forth above in this paragraph of the City's "Hold Harmless" agreement.

21.3 In Consultant's defense of the City under this Section, negotiation, compromise, and settlement of any action, the City shall retain discretion in and control of the litigation, negotiation, compromise, settlement, and appeals there from, as required by the Los Angeles City Charter, particularly Article II, Sections 271, 272 and 273 thereof.

21.4. Survival of Indemnities. The provisions of this Section 21 shall survive the termination of this MOU.

Section 22.0 <u>Compliance With Los Angeles City Charter Section 470(c)(12) and 609(E).</u>

The Consultant, other underwriting firm members of the underwriting syndicate, Subcontractors, and their Principals are obligated to fully comply with City of Los Angeles Charter Sections 470(c)(12), 609(e) and related ordinances, regarding limitations on campaign contributions and fundraising to certain elected City officials or candidates for elected City office. Gifts to elected officials and certain City officials are also limited. Additionally, Consultant and other underwriting firm members of the underwriting syndicate are required to provide and update certain information to the City as specified by law. Any Consultant and other underwriting firm members of the underwriting syndicate subject to Charter Section 470(cX12) and 609(e), shall include the following notice in any contract with a subcontractor expected to receive at least $100,000 for performance under this MOU:

<u>Notice Regarding City of Los Angeles Campaign Contribution and Fundraising Restrictions.</u>

As provided in Charter Sections 470(c)(12), 609(e) and related ordinances, you are subcontractor or underwriting firm on City of Los Angeles MOU/Resolution No. _____. Pursuant to City Charter Section 470(c)(12) and 609(e), underwriting firm, subcontractor and principals are prohibited from making campaign contributions and fundraising for certain elected City officials or candidates for elected City office for 12 months after the City contract is signed. Additionally, gifts are limited to elected officials and certain City officials. Subcontractor is required to provide to contractor names and addresses of the subcontractor's principals and contact information and shall update that information if it changes during the 12 month time period. Subcontractor's information included must be provided to contractor within 10 business days. Failure to comply may result in termination of contract or any other available legal remedies including fines. Information about the restrictions may be found at the City Ethics Commission's website at http://ethics.lacity.org/ or by calling 213/978-1960.

Consultant, underwriting firms, Subcontractors, and their Principals shall comply with these requirements and limitations. Violation of this provision shall entitle the City to terminate this Agreement and pursue any and all legal remedies that may be available.

Section 23.0 Assignment or Transfer Prohibited.

23.1. Consultant shall not, in any manner, directly or indirectly, by operation of law or otherwise, hypothecate, assign, transfer or encumber this MOU, or any portion thereof or any interest therein, in whole or in part, without the prior written consent of the CEO. The names of Subcontractor/Sub-consultants or others whom Consultant intends to employ to perform services shall be submitted to CEO for prior approval.

23.2. For purposes of this MOU, the terms "transfer" and "assign" shall include, but not be limited to, the following: (i) if Consultant is a partnership or limited liability company, the transfer of fifty percent (50%) or more of the partnership interest or membership or the dissolution of the Consultant; and, (ii) if Consultant is a corporation, any cumulative or aggregate sale, transfer, assignment, or hypothecation of fifty percent (50%) or more of the voting shares of Consultant.

Section 24.0 Intellectual Property Ownership and Rights.

24.1. Ownership. All Work Products originated and prepared by Consultant or its sub-consultant of any tier under this MOU shall be and remain the property of the City for its use in any manner it deems appropriate; provided, however, that any use unintended under this MOU, or modification or alteration of the Work Products without the direct involvement of the Consultant shall be without Liability to Consultant. Work Products are all works, tangible or not, created under this MOU for the City including, without limitation, documents, material, data, reports, manuals, specifications, artwork, drawings, sketches, computer programs and databases, schematics, photographs, video and audiovisual recordings, sound recordings, marks, logos, graphic designs, notes, websites, domain names, inventions, processes, formulas matters and combinations thereof, and all forms of intellectual property therein. To the extent applicable under the U.S. Copyright Act, all works created by Consultant under this MOU are work-made-for-hire created for the sole benefit and ownership of the City. Consultant hereby assigns, and agrees to assign to City, all goodwill, copyrights and trademarks in all Work Products originated and prepared by Consultant under this MOU. Consultant further agrees to execute any documents necessary for the City to perfect, memorialize, or record the City's ownership of rights provided herein. This paragraph shall survive expiration or termination of this MOU.

24.2. Obligations on Sub-consultant. Any sub-contract entered into by Consultant relating to this MOU, to the extent allowed hereunder, shall include a like provision (on City's ownership in Work Products) for work to be performed under this MOU to Contractually bind or otherwise oblige its sub-consultants performing work under this MOU such that the City's ownership rights of all Work Products are preserved and protected as intended herein. Failure of Consultant to comply with this requirement or to obtain the compliance of its sub-consultant with

such obligations shall subject Consultant to all remedies allowed under law and termination of this MOU.

24.3. Use of Work Products by Third Parties. Consultant shall not make available, provide or disclose any Work Product to any third party without prior written consent of the City.

24.4. No Transfer of Pre-Existing Intellectual Property. Nothing herein may be construed to transfer to the City any ownership, interest or right in any of the Consultant's intellectual property, trade secrets or know-how that is pre-existing before commencement of this MOU, or that is derived independent of Consultant's performance of this MOU.

24.5. Non-infringement Warranty. Consultant hereby represents and warrants that performance of all obligations under this MOU does not infringe in any way, directly or contributorily, upon any third party's intellectual property rights, including, without limitation, patents, copyrights, trademarks, trade secrets, right of publicity and proprietary information. This Section shall survive expiration or termination of this MOU.

24.6. Indemnification of Third Party Intellectual Property Infringement Claims.

Consultant will defend at its sole expense and hold harmless in any infringement claim, demand, proceeding, suit or action ("Action" hereinafter), the City, Its commissioners, officers, directors, agents, employees, or affiliates ("City Defendants") for any infringement or violation, actual or alleged, direct or contributory, intentional or otherwise, of any intellectual property rights, including patents, copyrights, trade secrets, trademarks, service marks, ideas, concepts, themes, methods, algorithms and other proprietary information or rights (collectively "Intellectual Property rights" hereinafter), (1) on or in any design, medium, matter, plant, article, process, method, application, equipment, device, instrumentation, software, hardware, or firmware used by the Consultant or Sub-Consultants in performing the work under this MOU; or (2) as a result of the City's actual or intended use of any Work Product furnished by Consultant and/or Sub-Consultant under the MOU. Consultant also shall indemnify the City against any loss, cost, expense, liability, and damages awarded against the City or settlement as a consequence of such Action. Under no circumstances is Consultant liable under this sub-Section to defend and hold the City harmless, where the City licenses or sublicenses for profit any of the intellectual property rights in the Work Product to a third-party whose use of the intellectual property gives rise to the alleged infringement and whose use is not in any way part of the intended use for the benefit of the City under this MOU.

24.7. In Consultant's defense of the City Defendants, negotiation, compromise, and settlement of any such infringement Action, the City shall retain discretion in and control of the

litigation, negotiation, compromise, settlement, and appeals there from, as required by the Los Angeles City Charter, particularly Article II, Sections 271, 272 and 273 thereof.

24.8. Where any Work Product furnished by Consultant is in a form of software or firmware (“Vehicle"), and if any part of the such Vehicle (a) becomes the subject of an Action, (b) is adjudicated as infringing a third party's Intellectual Property right, or (c) has its use enjoined or license terminated; Consultant shall, with the City's consent, do one of the following immediately. Consultant shall at its expense either:

i) Procure for the City the right to continue using said part of the Vehicle; OR

ii) Replace the Vehicle with a functionally equivalent, non-infringing product.

Exercise of any of the above-mentioned options shall not cause undue business interruption to the City or diminish the intended benefits and use of the Work Product by the City under the specifications herein.

24.9. Rights and remedies available to the City hereinabove shall survive the expiration or other termination of this MOU. Further, the rights and remedies are cumulative of those provided for elsewhere in this MOU and those allowed under the laws of the United States, the State of California, and the City of Los Angeles. This Paragraph shall survive the expiration or other termination of this MOU.

24.10. Consultant's Trade Secrets. Trade Secrets, as used in this MOU, are defined in California Government Code Section 6254.7 and California Evidence Code Section 1061(a)(1) and may include, but are not limited to, any formula, plan, pattern, process, tool, mechanism, compound, procedure, production data, or compilation of information which is not patented, which is known only to certain individuals within a commercial concern who are using it to fabricate, produce, or compound an article of trade or a service having commercial value and which gives its user an opportunity to obtain a business advantage over competitors who do not know or use it. No Work Products or deliverables created and delivered to City under this MOU may constitute Trade Secrets of Consultant.

24.11. Consultant hereby stipulates that City is not nor expected to be in possession of any of Consultant's Trade Secrets. In the unlikely event that Consultant reveals any of its Trade Secrets (that is so marked conspicuously on every page) to City to further the intent and purpose of this MOU and so notifies City in writing that ii has revealed its Trade Secrets to City, then City agrees to notify Consultant of any request made pursuant to the California Public Records Act, Cal. Gov. Code, § 6250 et seq., ("CPRA") that includes Consultant's Trade Secrets. City may disclose any of Consultant's Trade Secrets if Consultant does not object in writing to the

City after 10 calendar days from the notice mailing date by the City to Consultant of the CPRA request.

24.12. Unless expressly stated otherwise, for all pre-existing third-party and Consultant's intellectual property (if any), including software, required to operate or use any Work Product delivered by Consultant, Consultant hereby grants and will cause others to grant City (including its agents and consultants) a royalty-paid, perpetual, irrevocable license to use such pre-existing intellectual property internally by the City (including its agents and consultants).

Section 25.0 <u>Confidentiality of Information.</u>

25.1. Unless expressly agreed otherwise by the CEO in writing, all Deliverables (including but not limited to all drawings, documents, specifications, plans, reports, statistics and data) and any other information in any form prepared by or provided to Consultant in connection with this MOU (collectively, "Program Data") are property of the City and are confidential. Consultant expressly agrees that, except as specifically authorized by the CEO in writing or as may be required by law, Program Data will be made available only to the CEO, and, on a need-to-know basis, Consultant's employees and subcontractors. Consultant acknowledges that Program Data may contain information vital to the security of the Airports. Consultant shall take utmost precaution/measures while sharing information with its Sub-consultants, and shall do so on a need-to-know basis only, even while working on the Program. If Consultant fails to comply with this Section, Consultant will be liable for the reasonable costs of actions taken by the City, the airlines, the Federal Aviation Administration ("FAA"}, or the Transportation Security Administration ('TSA") that the applicable entity reasonably incurs in good faith as a result of such failure, including, without limitation, the design and construction of improvements, procurement and installation of security devices, and posting of guards. Consultant and its Sub-consultants shall store all the information gathered as part of this Program in a secure and safe place during and/or after the performance of this MOU.

25.2. Except as authorized in writing by the CEO, Consultant must not issue any publicity news releases or grant press interviews, and except as may be required by law during or after the performance of this MOU, disseminate any information regarding its Services or the tasks/projects to which the Services pertain.

25.3. If Consultant is presented with a subpoena or a request by an administrative agency regarding any Program Data which may be in Consultant's possession by reason of this MOU, Consultant must immediately give notice to the CEO and to the City Attorney for the City of Los Angeles, with the understanding that the City will have the opportunity to contest such process by any means available to it before any Program Data are submitted to any court, administrative agency, or other third party. Consultant, however, is not obligated to withhold the

delivery beyond the time ordered by the court or administrative agency, unless the subpoena or request is quashed or the time to produce is otherwise extended.

Section 26.0 Appropriation of Funds.

26.1 Notwithstanding any other provision of this MOU, including any exhibits or attachments incorporated herein, and in order for the City to comply with its governing legal requirements, the City shall have no obligation to make any payments to Consultant unless the City shall have first made an appropriation of funds equal to, or in excess of, its obligation to make any payments as, provided in this MOU. Consultant agrees that any services provided by Consultant, purchases made by Consultant, or expenses incurred by Consultant, in excess of said appropriation(s), shall be free and without charge to the City, and the City shall have no obligation to pay for any of said services, purchases or expenses. Consultant shall have no obligation to provide services, nor to incur any expenses, in excess of the appropriated amount(s) until the City appropriates additional funds for this MOU.

26.2 If the City does not appropriate additional funds in an amount equal to, or in excess of, its obligation to make any payments as provided in this MOU, either party may terminate the MOU by providing thirty (30) days written notice to the other party. The parties agree that this termination provision shall have no force or effect on either of the parties' respective rights to terminate this MOU under any other provision thereof.

Section 27.0 Compliance With Applicable Laws.

Consultant shall, at all times during the performance of its obligations under this MOU, comply with all then currently enacted local, Department of Airports, State and Federal laws, statutes, ordinances, rules, regulations, restrictions and/or orders, including the hazardous waste and hazardous materials regulations, and the Americans With Disabilities Act of 1990 (collectively "Laws"), to the extent such Laws are applicable to the Program. Consultant shall be solely responsible for any and all damages caused, and/or penalties levied, as the result of Consultant's noncompliance with such enactments. Further, Consultant agrees to cooperate fully with City in its efforts to comply with the Americans With Disability Act of 1990 and CA Title Section 24, and any amendments thereto, or successor statutes.

Section 28.0 Waiver.

The waiver by City of any breach of any term, covenant, or condition herein contained shall not be deemed to be a waiver of any other term, covenant, or condition, or of any subsequent breach of the same term, covenant, or condition.

Section 29.0 <u>Miscellaneous.</u>

29.1 It is the intention of the parties hereto that if any provision of this MOU is capable of different constructions, one of which would render the provision void and the other of which would render the provision valid, then the provision shall have the meaning which renders it valid.

29.2 In the event that any of the provisions, or portions or applications thereof, of this MOU are held to be unenforceable or invalid by any court of competent jurisdiction, City and Consultant shall endeavor to negotiate an equitable adjustment in the provisions of this MOU with a view toward effecting the purpose of this MOU, and the validity and enforceability of the remaining provisions, portions or applications thereof shall not be affected thereby.

29.3 This MOU, and every question arising hereunder, shall be construed, determined and enforced in accordance with the laws of the State of California. Venue shall be at the Southwest District of the Superior Court of the State of California for the County of Los Angeles.

29.4 The Section headings appearing herein shall not be deemed to govern, limit, modify or in any manner affect the scope, meaning or intent of the provisions of this MOU.

29.5 Any of SMBRA's contributions made under this agreement do not by direct reference or implication convey LAWA endorsement of SMBRA's products or activities.

29.6 In order for SMBRA to use the LAWA insignia on any published media, such as a Web page, printed publication, or audiovisual production, permission must be granted from the LAWA Public Relations and Government Affairs Divisions. A written request must be submitted and approval granted in writing by the LAWA Public Relations Division prior to use of the insignia. Approval must be obtained from: Nancy Castles, Public and Community Relations Director II, Phone No. (424) 646-5260, Email - *ncastles@lawa.org*.

Section 30.0 <u>Entire Agreement.</u>

It is expressly understood and agreed by the parties that this MOU is the entire agreement between the parties hereto and supersedes any and all prior written or oral agreements between them concerning the subject matter contained herein. There are no representations, agreements, or understandings, oral or written, between and among the parties relating to the subject matter contained in this MOU which are not fully set forth herein. This is an integrated agreement. Any amendment(s) or changes(s) to this MOU shall be in writing and effective only when such amendment(s) or change(s) are executed by the parties hereto.

Section 31.0 <u>Regulatory Prohibitions.</u> Notwithstanding any provision of this Agreement, LAWA will not be required to expend any funds or take any actions that are prohibited or disapproved by the FAA or any other regulatory agency or by any local, state or federal law, regulation or requirement.

Remainder of This Page Intentionally Left Blank

IN WITNESS WHEREOF, City has caused this MOU to be executed on its behalf by Chief Executive Officer, and Consultant has caused the same to be executed by its duly authorized officers, and its corporate seal to be hereunto affixed, all as of the day and year first hereinabove written.

APPROVED AS TO FORM:
MICHAEL N. FEUER, City Attorney

Date: _____

By: _____
Deputy City Attorney

CITY OF LOS ANGELES

By: _____
Chief Executive Officer
Department of Airports

By: _____
Chief Financial Officer
Department of Airports

SANTA MONICA BAY RESTORATION AUTHORITY

By: _____
Signature

By: _____
Print Name

APPROVED AS TO FORM

By: _____

EXHIBIT A

Schedule A

SCOPE OF WORK

TASK NO. 1:
LAWA Approved Activities for the Ongoing Removal of Invasive Plant Species, Planting of Native Species, and Habitat Maintenance for the LAX Coastal Dunes Improvement Project (CDIP).

LAWA-approved activities to remove invasive plant species, plant native coastal dune and coastal vegetation, and provide habitat maintenance for the CDIP in compliance with (a) California Coastal Commission Permit No. 5-12-263 and (b) the Ecological Landscape Plan for the Los Angele International Airport Coastal Dunes Improvement Project, City of Los Angeles, California dated April 2013; both of which are attached hereto.

Specific restoration tasks will include, but are not limited to:

- Conducting invasive and non-native plant removals;
- Native dune, scrub, and grassland seed collection (or purchase when not available), propagation, and planting;
- Conservation data collection of rare plants, if present;
- Professional ecological monitoring;
- GIS database development and mapping that will show locations of rare plants and indicators of progress of restoration over time (i.e. percent cover of native and non-native plants);
- Container plant propagation and outplanting; and
- Rare plant outplanting experiments of plants approved by the Coastal Commission, U.S. Fish and Wildlife Service and the California Department of Fish and Wildlife for outplanting in the dunes, if agreed upon by all parties.

Santa Monica Bay Restoration Authority (SMBRA) will monitor and advise LAWA maintenance staff on the following tasks:

- Short-term annual grass control through mowing and shallow disking and/or herbicide application as prescribed in the Ecological Landscaping Plan; and
- Invasive and non-native tree removals (e.g. *Acacia*) or large-scale invasive plants that may require herbicide application (e.g. *Arundo donax*).

SMBRA will also provide biological avoidance and clearance monitoring services for LAWA maintenance staff or their contractors on anthropogenic infrastructure removal such as concrete, asphalt, and trash.

TASK NO. 2:
Annual Management Plans and Quarterly Progress Reports prepared for LAWA.

Plans and Reports (in a format approved by LAWA) to include, at a minimum, the following:

- Annual Work Plans to be provided by November 15th of each calendar year setting forth all activities to be undertaken and costs to be incurred in the following calendar year to remove invasive plant species, to plant native species, to maintain the habitat within the CDIP area, to recruit, train, and manage volunteers, and to conduct public relations and community engagement activities, during the following calendar year;

- Annual Progress Reports to be provided by March 31st of each year summarizing the previous calendar year, including overall restoration progress, monitoring report data, volunteer restoration events, maintenance activities, and relevant photographs; and

- Quarterly Progress Reports to be provided within 30 days of the end of any quarter setting forth all activities undertaken and costs incurred, a summary of restoration and monitoring work completed, and a description of any progress made and challenges during the previous 3 months.

TASK NO. 3:
Recruitment, Training, and Management of Volunteer Workers.

SMBRA shall recruit, train, and manage volunteer workers to assist with the performance of LAWA-approved invasive plant removal, planting of native species, and habitat maintenance. Such volunteer activities may consist of Adopt-a-Dunes days or other similar events at the discretion of LAWA. SMBRA will be responsible for training volunteer workers (training to be approved by LAWA) and for oversight of volunteer workers and their activities while in the Dunes or on any other LAWA property. SMBRA will ensure properly trained personnel with requisite expertise accompany all volunteer workers while in the Dunes.

TASK NO. 4:
Data Collection and Monitoring of Restoration Efforts and Preparation of Landscaping Monitoring Report(s).

As directed by LAWA, SMBRA shall record and monitor habitat restoration progress in the CDIP. At a minimum, monitoring shall consist of periodically recording weed abatement and seeding efforts and assessing vegetation cover. LAWA may also request (in writing) additional monitoring efforts, at the direction of LAWA, assessing the current condition or long-term health of the system. All data will be entered and quality control checked by SMBRA. Electronic copies of the data will be provided to LAWA upon request, and will be maintained electronically for no less than 10 years after collection.

SMBRA shall prepare required Monitoring Reports which, after approval by LAWA, shall be provided to LAWA for it to submit to the Coastal Commission in accordance with Coastal Commission Permit No. 5-12-263, Section C. The report must be prepared by a biologist, landscape architect or qualified resource specialist. The report will assess whether the on-site landscaping in the CDIP area is in conformance with the Ecological Landscape Plan and provides at least 80% relative coverage of planted area and resists invasion by exotic plant species. The monitoring report shall include photographic documentation of plant species, plant coverage, and an evaluation of the conformance of the resultant landscaping with special conditions set forth in Coastal Commission Permit No. 5-12-263 and the approved Ecological Landscaping Plan.

TASK NO. 5:
Revised or Supplemental Ecological Landscaping Plan(s).

SMBRA shall prepare any LAWA requested supplemental Ecological Landscaping Plans as specified in Coastal Commission Permit No. 5-12-263. Revised or supplemental ecological landscaping plans may be required if the Landscaping Monitoring Report indicates that the landscaping is not in conformance with or has failed to meet the performance standards specified in the Ecological Landscaping Plan. Any revised or supplemental ecological landscaping plans shall be prepared by a biologist, landscape architect, or qualified resource specialist and shall specify measures to remediate the landscaping that failed or is not in conformance with the Ecological Landscape Plan and/or the special conditions set forth in Coastal Commission permit 5-12-263.

TASK NO. 6:
Public Relations, Media, and Community Engagement.

SMBRA will, as requested by LAWA, assist LAWA with public relations, media contact, and public information distribution. All releases, contact and information distribution shall require LAWA approval prior to the release, contact or distribution.

TASK NO. 7:
Identification of Additional Funding for Ecological Habitat Restoration.

SMBRA shall identify additional funding for ecological habitat restoration in the broader LAX/El Segundo Dunes area through grants, private sources, or other partnerships. At LAWA's direction, SMBRA may pursue additional funding opportunities within the context of this agreement.

Santa Monica Bay Restoration Authority (SMBRA)

DELIVERABLES

Year	Reporting Deliverables *, **	Deadline(s) ***	Description (See "Scope of Work" for Details)
1	2017 Work Plan	December 31, 2016	Submit Work Plan for next calendar year (2017).
	1st QR, 2nd QR, 3rd QR	Mar 31, June 30, Sep 30, 2017	Implement Work Plan, Submit Quarterly Reports.
	2017 Annual Report	May 31, 2018	Submit 2017 Annual Report, include summary of activities.
2	2018 Work Plan	November 30, 2017	Submit Work Plan for next calendar year (2018).
	1st QR, 2nd QR, 3rd QR	Mar 31, June 30, Sept 30, 2018	Implement Work Plan, Submit Quarterly Reports.
	2018 Annual Report	May 31, 2019	Submit 2018 Annual Report, include summary of activities.
3	2019 Work Plan	November 30, 2018	Submit Work Plan for next calendar year (2019).
	1st QR, 2nd QR, 3rd QR	Mar 31, Jun 30, Sept 30, 2019	Implement Work Plan, Submit Quarterly Reports.
	2019 Annual Report	May 31, 2020	Submit 2019 Annual Report, include summary of activities.

** Note: Annual Report will be submitted in lieu of a 4th Quarter Report and will include activities for the entire year; a site walk will be scheduled w/ LAWA & The Bay Foundation (TBF) at time of submittal.*

*** QR = Quarterly Report will include summary activities and an invoice to LAWA.*

**** = Deadline refers to submittal date to LAWA.*

"Activities" will include monitoring, restoration work, and reporting as detailed in the scope of work in the MOU.

EXHIBIT B

EXHIBIT B

Santa Monica Bay Restoration Authority (SMBRA)

LUMP SUM COMPENSATION SCHEDULE

Year	*Proposed Fees*	*1st Quarter*	*2nd Quarter*	*3rd Quarter*	*4th Quarter*
1	$ 94,000	$ 23,500	$ 23,500	$ 23,500	$ 23,500
2	$ 79,000	$ 19,750	$ 19,750	$ 19,750	$ 19,750
3	$ 77,000	$ 19,250	$ 19,250	$ 19,250	$ 19,250
TOTAL	**$ 250,000**	**$ 62,500**	**$ 62,500**	**$ 62,500**	**$ 62,500**

EXHIBIT C

EXHIBIT C

FIRST SOURCE HIRING PROGRAM
for
AIRPORT EMPLOYERS

I. Purpose. The purpose of this First Source Hiring Program is to facilitate the employment of Targeted Applicants by Airport Employers. It is a goal of this First Source Hiring Program that this Program benefit Airport Employers by providing a pool of qualified job applicants, through a non-exclusive referral system.

II. Definitions.

As used in this Program, the following capitalized terms shall have the following meanings. All definitions include both the singular and plural form.

"Airport Employer" shall mean a party that, through a contract, lease, licensing arrangement, or other arrangement, agrees to comply with this First Source Hiring Program with regard to Airport Jobs. Operators of Transportation Charter Party limousines, non-tenant shuttles, and taxis shall not be considered Airport Employers.

"Airport Job" shall mean a job that either (i) is performed On-Site, or (ii) is directly related to a contract, lease, licensing arrangement, or other arrangement under which the employer is an Airport Employer. Positions for which the City's Worker Retention Policy requires hiring of particular individuals shall not constitute Airport Jobs for purposes of this Program.

"City" shall mean the City of Los Angeles.

"LAWA" shall mean Los Angeles World Airports.

"Low-Income Individual" shall mean an individual whose household income is no greater than 80% of the median income, adjusted for household size, for the Primary Metropolitan Statistical Area.

"Program" shall mean this First Source Hiring Program.

"Project Impact Area" shall have the meaning set forth in the "Final Environmental Impact Report" for the LAX Master Plan Program, dated April 2004, as supplemented by one or more EIR Addenda prior to certification of the EIR by the City Council.

"Referral System" shall mean the referral system established to provide applicant referrals for the Program.

"Special Needs Individuals" shall mean: (i) individuals who receive or have received public assistance through the Temporary Assistance for Needy Families Program, within the past 24 months; (ii) individuals who are homeless; (iii) ex-offenders, (iv) chronically unemployed, and (v) dislocated airport workers.

"Targeted Applicants" shall have the meaning set forth in Section IV, below.

III. Coverage. This Program shall apply to hiring by Airport Employers for all Airport Jobs, except for jobs for which the hiring procedures are governed by a collective bargaining agreement that conflicts with this Program.

IV. Targeted Applicants. Referrals under the First Source Hiring Program shall, to the extent permissible by law, be made in the order of priority set forth below.

- **First Priority:** Low-Income Individuals living in the Project Impact Area for at least one year and Special Needs Individuals;
- **Second Priority:** Low-Income Individuals residing in the City.

V. Initial Airport Employer Roles.

A. Liaison. Each Airport Employer shall designate a liaison for issues related to the Program. The liaison shall work with LAWA, the Coalition Representative, the Referral System provider, and relevant public officials to facilitate effective implementation of this Program.

B. Long-Range Planning. Any entity that becomes an Airport Employer at least two months prior to commencing operations related to LAX shall, at least two months prior to commencing operations related to LAX, provide to the Referral System the approximate number and type of Airport Jobs that it will fill and the basic qualifications necessary.

VI. Airport Employer Hiring Process.

A. Notification of job opportunities. Prior to hiring for any Airport Job, an Airport Employer shall notify the Referral System, by e-mail or fax, of available job openings and provide a description of job responsibilities and qualifications, including expectations, salary, work schedule, duration of employment, required standard of appearance, and any special requirements (e.g. language skills, drivers' license, etc.). Job qualifications shall be limited to skills directly related to performance of job duties.

B. Referrals. After receiving a notification under Section VI.A above, the Referral System shall within five days, or longer time frame agreed to by the Referral

System and Airport Employer, refer to the Airport Employer one or more Targeted Applicants who meet the Airport Employer's qualifications.

C. Hiring.

1. New Employer Targeted Hiring Period. When making initial hires for the commencement of an Airport Employer's operations related to LAX, the Airport Employer shall consider and hire only Targeted Applicants for a two week period following provision of the notification described in Section VI.A. After this period, the Airport Employer shall make good-faith efforts to hire Targeted Applicants, but may consider and hire applicants referred or recruited through any source.

2. Established Employer Targeted Hiring Period. When making hires after the commencement of operations related to LAX, an Airport Employer shall consider and hire only Targeted Applicants for a five-day period following provision of the notification described in Section VI.A. After this period, the Airport Employer shall make good-faith efforts to hire Targeted Applicants, but may consider and hire applicants referred or recruited through any source.

3. Hiring Procedure During Targeted Hiring Periods. During the periods described in Sections VI.C.1 and 2, above, Airport Employers may hire Targeted Applicants recruited or referred through any source. During such periods Airport Employers shall use normal hiring practices, including interviews, to consider all applicants referred by the Referral System.

4. No Referral Fees. No Airport Employer or referred job candidate shall be required to pay any fee, cost or expense of the Referral System or this Program in connection with referrals.

VIII. Reporting and Recordkeeping.

A. Reports. During the time that this Program is applicable to any Airport Employer, that Airport Employer shall, on a quarterly basis, notify the Referral System of the number, by job classification, of Targeted Applicants hired by the Airport Employer during that quarter, and the total number of employees hired by the Airport Employer for Airport Jobs during that quarter. Any Airport Employer who has not had hiring activity for the quarter, shall also notify the Referral System of such inactivity.

B. Recordkeeping. During the time that this Program is applicable to any Airport Employer, that Airport Employer shall retain records sufficient for monitoring of compliance with this Program with regard to each Airport Job, including records of notifications sent to the Referral System, referrals from the Referral System, job applications received from any source, number of Targeted Applicants hired, and total number of employees hired for Airport Jobs. To the extent allowed by law, and upon reasonable notice, these records shall be made available to LAWA and to the Referral System for inspection upon request. The Coalition Representative may request that

LAWA provide such records at anytime. Records may be redacted so that individuals are not identified by name and so that information required by law to remain confidential is excluded.

C. Complaints. If LAWA, the Coalition, or the Referral System believes that an Airport Employer is not complying with this Program, then the designated LAWA office shall be notified to ensure compliance with this program.

D. Liquidated Damages. Each Airport Employer agrees to pay to LAWA liquidated damages in the amount of $1,000 where LAWA finds that the Airport Employer has violated this Program with regard to hiring for a particular Airport Job. LAWA shall establish procedures providing to Airport Employers notice and an opportunity to present all relevant evidence prior to LAWA's final determination regarding an alleged violation. This liquidated damages provision does not preclude LAWA from obtaining any other form of available relief to ensure compliance with this Program, including injunctive relief.

IX. Miscellaneous.

A. Compliance with State and Federal Law. This Program shall be implemented only to the extent that it is consistent with the laws of the state of California and the United States. If any provision of this Program is held by a court of law to be in conflict with state or federal law, the applicable law shall prevail over the terms of this Program, and the conflicting provisions of this Program shall not be enforceable.

B. Severability Clause. If any term, provision, covenant or condition of this Program is held by a court of competent jurisdiction to be invalid, void, or unenforceable, the remainder of the provisions shall continue in full force and effect.

C. Binding on Successors. This Program shall be binding upon and inure to the benefit of the successors in interest, transferees, assigns, present and future partners, subsidiary corporations, affiliates, agents, representatives, heirs, and administrators of any party that has committed to comply with it. Any reference in this Program to a party shall be deemed to apply to any successor in interest, transferee, assign, present or future partner, subsidiary corporation, affiliate, agent, representative, heir or administrator of such party.

D. Lease Agreements and Contracts. Airport Employers shall not execute any sublease agreement or other contract under which Airport Jobs may occur directly or indirectly, unless the entirety of this Program is included as a material term thereof, binding on all parties.

E. Assurance Regarding Preexisting Contracts. Each Airport Employer warrants and represents that as of the date of execution of this Program, it has executed no sublease agreement or other contract that would violate any provision of this Program

had it been executed after the date of incorporation of this Program into a binding contract.

F. Intended Beneficiaries. LAWA, the Coalition, and the Referral System are intended third-party beneficiaries of contracts and other agreements that incorporate this Program with regard to the terms and provisions of this Program. However, the parties recognize that only LAWA has the sole responsibility to enforce the provisions of this program with Airport Contractors as defined in Section II of the CBA.

G. Material Terms. All provisions of this Program shall be material terms of any lease agreement or contract in which it is incorporated.

H. Effective Date. Section VI of this Program shall become effective on the effective date of the contract or agreement into which it is incorporated, or on July 1, 2005, whichever is later.

I. Construction. Any party incorporating this Program into a binding contract has had the opportunity to be advised by counsel with regard to this Program. Accordingly, this Program shall not be strictly construed against any party, and the rule of construction that any ambiguities be resolved against the drafting party shall not apply to this Program.

J. Entire Agreement. This Program contains the entire agreement between the parties on the subjects described herein, and supercedes any prior agreements, whether written or oral. This Program may not be altered, amended or modified except by an instrument in writing signed in writing by all parties to the contract in which it is incorporated.

EXHIBIT D

INSURANCE REQUIREMENTS FOR LOS ANGELES WORLD AIRPORTS

NAME:	**SANTA MONICA BAY RESTORATION AUTHORITY**
AGREEMENT / ACTIVITY:	**Memorandum of Agreement – environmental consulting and support services associated with the Coastal Dunes Improvement Project.**
TERM:	**Seven years**
LAWA DIVISION:	**Capital Programming, Planning & Engineering Group**

The insured must maintain insurance coverage at limits normally required of its type operation; however, the following coverage noted with an "X" is the minimum required and must be at least the level of the limits indicated. All limits are per occurrence unless otherwise specified.

	LIMITS
(X) Workers' Compensation/Employer's Liability (**X**) Voluntary Compensation Endorsement (**X**) Waiver of Subrogation, specifically naming LAWA (Please see attached supplement)	**Statutory**
(X) Commercial Automobile Liability - covering owned, non-owned & hired auto	**$1,000,000 CSL**
(X) Commercial General Liability, including the following coverage: (**X**) Premises and Operations (**X**) Contractual (Blanket/Schedule) (**X**) Independent Contractors (**X**) Personal Injury (**X**) Products /Completed Operations (**X**) Additional Insured Endorsement, specifically naming LAWA (Please see attached supplement). ( ) Explosion, Collapse & Underground (required when work involves digging, excavation, grading or use of explosive materials.) **(**) Hangarkeepers Legal Liab. (At least at a limit of liability of $ 1 million)	**$1,000,000**
Coverage for Hazardous Substances *** If exposure exists; must meet contractual requirements	**$ *** **

CONTRACTOR SHALL BE HELD RESPONSIBLE FOR OWN OR HIRED EQUIPMENT AND SHALL HOLD AIRPORT HARMLESS FROM LOSS, DAMAGE OR DESTRUCTION TO SUCH EQUIPMENT.

INSURANCE COMPANIES WHICH DO NOT HAVE AN AMBEST RATING OF A- OR BETTER, AND HAVE A MINIMUM FINANCIAL SIZE OF AT LEAST 4, MUST BE REVIEWED FOR ACCEPTABILITY BY RISK MANAGEMENT.

PLEASE RETURN THIS FORM WITH EVIDENCE OF INSURANCE

INSURANCE REQUIREMENTS FOR LOS ANGELES WORLD AIRPORTS (SUPPLEMENT)

The **only** evidence of insurance accepted will be either a Certificate of Insurance and/or a True and Certified copy of the policy. The following items must accompany the form of evidence provided:

- **Endorsements:**

  1. Workers Compensation Waiver of Subrogation Endorsement
     - WC 04 03 06 or similar

  2. General Liability Additional Insured Endorsement
     - ISO Standard Endorsements
     - Ongoing and completed operations

  ****All endorsements must specifically name in the schedule:

  The City of Los Angeles, Los Angeles World Airports, its Board, and all of its officers, employees and agents.

  A BLANKET/AUTOMATIC ENDORSEMENT AND/OR LANGUAGE ON A CERTIFICATE OF INSURANCE IS NOT ACCEPTABLE.

- A typed legible name of the Authorized Representative must accompany the signature on the Certificate of Insurance and/or the True and Certified copy of the policy.

EXHIBIT E

Los Angeles
World Airports

TM

July 11, 2013

Al Padilla, Coastal Program Analyst
California Coastal Commission
South Coast Area Office
200 Ocean Gate, Suite 1000
Long Beach, CA 90802-4302

Re: **Signed Copy of Coastal Development Permit No. 5-12-2013**

Dear Mr. Padilla:

Thank you for your approval of Coastal Development Permit No. 5-12-2013 for the LAX Coastal Dunes Improvement Project. As requested, attached please find a copy of the permit with the signed acknowledgement.

Los Angeles World Airports (LAWA) will kick off the project this Saturday, July 13th, 2013, with volunteers from the Los Angeles Conservation Corps, BOEING Corporation, and the California Native Plant Society gathering to help remove iceplant and to collect seeds for the project. We are very pleased to have the permit in time for this community event.

Please contact Peggy Nguyen of my staff with any questions at PeggyNguyen@LAWA.org, or 424-646-6488.

Sincerely,

Robert D. Freeman
Airport Environmental Manager II

RDF:ELB:PHN:oc

Attachments: Copy of Signed Coastal Development Permit No. 5-12-2013

cc: Michael Feldman (with attachments)
Ralph Morones (with attachments)
Russ Lewis (with attachments)
Ed Melara (with attachments)
Intissar Durham (with attachments)
Julie Sauter (with attachments)
Masih Hashemi (with attachments)
Kevin Merk (kmerk@kevinmerkassociates.com)

Z:\LETTERSANDMEMOS

STATE OF CALIFORNIA - NATURAL RESOURCES AGENCY
EDMUND G. BROWN, JR., *GOVERNOR*

CALIFORNIA COASTAL COMMISSION
South Coast Area Office
200 Oceangate, Suite 1000
Long Beach, CA 90802-4302
(562) 590-5071

Date: June 25, 2013
Permit No: 5-12-263

COASTAL DEVELOPMENT PERMIT

On **January 10, 2013**, the California Coastal Commission granted to **Los Angeles World Airports** Coastal Development Permit **5-12-263**, subject to the attached Standard and Special Conditions, for development consisting of: **Remove selected abandoned streets, including curbs, gutters, sidewalks, retaining walls, foundations, above ground utilities, all covering approximately 4 acres in area; repair curb and gutter along Vista del Mar; reduce non-native invasive plants; and plant approximately 6 acres of native coastal dune and coastal prairie vegetation within an approximately 48 acre area that was formally a residential subdivision.** More specifically described in the application file in the Commission offices.

The development is within the coastal zone in Los Angeles County at **8901 S. Pershing Street, El Segundo Dunes, Los Angeles.**

Issued on behalf of the California Coastal Commission on June 25, 2013.

CHARLES LESTER
Executive Director

By: _____
Title: Coastal Program Analyst

ACKNOWLEDGMENT

The undersigned permittee acknowledges receipt of this permit and agrees to abide by all terms and conditions thereof.

The undersigned permittee acknowledges that Government Code Section 818.4 which states in pertinent part, that: "A public entity is not liable for injury caused by the issuance . . . of any permit . . ." applies to the issuance of this permit.

IMPORTANT: THIS PERMIT IS NOT VALID UNLESS AND UNTIL A COPY OF THE PERMIT WITH THE SIGNED ACKNOWLEDGMENT HAS BEEN RETURNED TO THE COMMISSION OFFICE. 14 CAL. ADMIN. CODE SECTION 13158(a).

7/8/13
Date

_____
Signature of Permittee

Please sign and return one copy of this form to the Commission office at the above address.

STANDARD CONDITIONS

1. **Notice of Receipt and Acknowledgment.** The permit is not valid and development shall not commence until a copy of the permit, signed by the permittee or authorized agent, acknowledging receipt of the permit and acceptance of the terms and conditions, is returned to the Commission office.

2. **Expiration.** If development has not commenced, the permit will expire two years from the date on which the Commission voted on the application. Development shall be pursued in a diligent manner and completed in a reasonable period of time. Application for extension of the permit must be made prior to the expiration date.

3. **Interpretation.** Any questions of intent or interpretation of any condition will be resolved by the Executive Director or the Commission.

4. **Assignment.** The permit may be assigned to any qualified person, provided assignee files with the Commission an affidavit accepting all terms and conditions of the permit.

5. **Terms and Conditions Run with the Land.** These terms and conditions shall be perpetual, and it is the intention of the Commission and the permittee to bind all future owners and possessors of the subject property to the terms and conditions.

SPECIAL CONDITIONS:

1. Landscaping Plan

A. PRIOR TO ISSUANCE OF THE COASTAL DEVELOPMENT PERMIT, the applicant will submit, for the review and written approval of the Executive Director, a plan for landscaping that is compatible with habitat restoration within the El Segundo Blue Butterfly preserve. A qualified biologist or licensed landscape architect, with expertise in dune restoration, shall prepare the plan. The plan shall include the following:

1. Vegetation planted on the site will consist of native plants typically found in Southern California coastal dunes and prairies. The seeds and cuttings employed shall be from sources in and adjacent to the El Segundo Dunes. If other Southern California sources are used, the locations of the seed/ cutting sources and the approximate number of plants and/or amount of seeds/cuttings from each source shall be reported to the Executive Director.
2. No non-native or invasive species will be employed on the site. Invasive plants are those identified in the California Native Plant Society, Los Angeles -- Santa Monica Mountains Chapter handbook entitled *Recommended List of Native Plants for Landscaping in the Santa Monica Mountains,* January 20, 1992, those species listed by the California Exotic Plant Pest Council on any of their watch lists as published

in 1999, and those otherwise identified by the Department of Fish and Game or the United States Fish and Wildlife Service.

3. Planting will maintain available views of the beach and ocean.
4. The site will be stabilized immediately with jute matting, straw wattles, or other BMPs to minimize erosion during the raining season (November 1 to March 31) if plantings have not been fully established.
5. No permanent irrigation system shall be allowed. Temporary above ground irrigation to allow the establishment of the plantings is allowed if a temporary above ground irrigation system is used, then once all plantings have been established, the temporary irrigation system shall be removed

B. The plan shall include, at a minimum, the following components:

1. A map showing the types, size, and locations of all plant materials that will be on the site, the temporary irrigation system, topography of the developed site, and all other landscape features;
2. A schedule for installation of native plants/removal of non-native plants;
3. An identification of seed sources and plant communities of the plants planned to be employed;

C. Five years from the date of issuance of Coastal Development Permit No. 5-12-263, the applicant shall submit for the review and approval of the Executive Director, a monitoring report, prepared by a licensed biologist, landscape architect or qualified resource specialist that assesses whether the on-site landscaping is in conformance with the landscaping plan approved pursuant to this special condition and provides no less than 80% relative coverage of planted area and resists invasion by exotic plant species. The monitoring report shall include photographic documentation of plant species, plant coverage and an evaluation of the conformance of the resultant landscaping with the requirements of this special condition.

If the landscape monitoring report indicates the landscaping is not in conformance with or has failed to meet the performance standards specified in the landscaping plan approved pursuant to this permit, the applicant, or successors in interest, shall submit a revised or supplemental landscape plan for the review and approval of the Executive Director. The revised landscaping plan must be prepared by a licensed landscape architect or a qualified resource specialist and shall specify measures to remediate those portions of the original plan that have failed or are not in conformance with the original approved plan.

D. The permittee shall undertake development in accordance with the approved final plan and schedule and other requirements. Any proposed changes to the approved final plan shall be reported to the Executive Director. No changes to the approved final plan shall occur without a Commission amendment to this coastal development permit unless the Executive Director determines that no amendment is required.

2. Erosion Control

A. Prior to Issuance of the Coastal Development Permit, the applicant shall submit, for review and approval of the Executive Director, a plan for erosion and drainage control.

1) Erosion and Drainage Control Plan

(a) The erosion and drainage control plan shall demonstrate that:

- During construction, erosion on the site shall be controlled to avoid adverse impacts on adjacent properties, undisturbed native vegetation areas, and surrounding public streets.
- The following temporary erosion control measures shall be used during construction: temporary sediment basins (including debris basins, desilting basins or silt traps), temporary drains and swales, sand bag barriers, silt fencing, stabilize any stockpiled fill with geofabric covers or other appropriate cover, install geotextiles or mats on all cut or fill slopes, and close and stabilize open trenches as soon as possible.
- Permanent erosion and drainage control measures shall be installed, if necessary, to ensure the stability of the site, adjacent properties, and public streets.
- All drainage shall be directed toward the street into suitable collection and discharge facilities.

(b) The plan shall include, at a minimum, the following components:

- A narrative report describing all temporary run-off and erosion control measures to be used during construction and all permanent erosion control measures to be installed for permanent erosion control.
- A site plan showing the location of all temporary erosion control measures.
- A schedule for installation and removal of the temporary erosion control measures.
- A written review and approval of all erosion and drainage control measures by the applicant's engineer and/or geologist.
- A written agreement indicating where all excavated material will be disposed and acknowledgement that any construction debris disposed within the coastal zone requires a separate coastal development permit.

(c) The plan shall also include temporary erosion control measures should grading or site preparation cease for a period of more than 30 days, including but not limited to: stabilization of all stockpiled fill, access roads, disturbed soils, and cut and fill slopes with geotextiles and/or mats, sand bag barriers, and/or silt fencing; and include temporary drains and swales and sediment basins. These temporary erosion control measures shall be monitored and maintained until grading or construction operations resume.

B. The permittee shall undertake development in accordance with the approved final plans. Any proposed changes to the approved final plans shall be reported to the Executive Director. No changes to the approved final plans shall occur without a Commission amendment to this coastal development permit unless the Executive Director determines that no amendment is required.

3. Future Development

By the acceptance of this permit the applicant agrees that this permit is only for the development described in coastal development permit No. 5-12-263. Pursuant to Title 14 California Code of Regulations Section 13253(b)(6), the exemptions otherwise provided in Public Resources Code section 30610(b) shall not apply to any of the parcel, generally depicted in **Exhibit No. 3**. Accordingly, any future improvements to the property, including but not limited to repair and maintenance identified as requiring a permit in Public Resources Section 30610(d) and Title 14 California Code of Regulations Sections 13252(a)-(b), which are proposed within the area shall require an amendment to Permit No. 5-12-263 from the Commission or shall require an additional coastal development permit from the Commission or from the applicable certified local government.

EXHIBIT F

ECOLOGICAL LANDSCAPE PLAN
For the
LOS ANGELES INTERNATIONAL AIRPORT
COASTAL DUNES IMPROVEMENT PROJECT
CITY OF LOS ANGELES, CALIFORNIA

Prepared for:

Los Angeles World Airports
7301 World Way West
Los Angeles, California 90045

Prepared by:

Kevin Merk Associates, LLC
P.O. Box 318
San Luis Obispo, California 93406

April 2013

Los Angeles
World Airports

TM

June 20, 2013

Al Padilla, Coastal Program Analyst
California Coastal Commission
South Coast Area Office
200 Ocean Gate, Suite 1000
Long Beach, CA 90802-4302

LAX

LA/Ontario

Van Nuys

City of Los Angeles

Antonio R. Villaraigosa
Mayor

Board of Airport Commissioners

Michael A. Lawson
President

Valeria C. Velasco
Vice President

Joseph A. Aredas
Robert D. Beyer
Ann M. Hollister
Raúl Pérez
Fernando M. Torres-Gil

Gina Marie Lindsey
Executive Director

RE: **Concurrence with U.S. Fish and Wildlife Service (USFWS) Correspondence Regarding Plant Palette for LAX Coastal Dunes Improvement Project and Amendment to the Ecological Landscape Plan (CDP No. 5-12-263)**

Dear Mr. Padilla:

The April 2013 Ecological Landscape Plan for the LAX Coastal Dunes Improvement Project (CDIP) was transmitted to the California Coastal Commission on April 12, 2013, in fulfillment of Special Condition No. 1 outlined in the Notice of Intent to Issue Permit No. 5-12-263 .

Please find attached a revised plant palette for the CDIP Ecological Landscape Plan reflecting concurrence with concerns raised by Mr. William B. Miller of the U.S. Fish and Wildlife Service during his review of this Plan. Table 1 lists the species comprising the coastal dunes scrub seed mix. Table 2 lists the species comprising the coastal prairie seed mix. Please substitute these tables for those found on page 23 of the April 2013 Ecological Landscape Plan.

In accordance with LAWA's discussions with the U.S. Fish and Wildlife Service (USFWS) and the California Coastal Commission regarding the plant palette, the following revisions were made to the original plant palette:

1) ADDITION of *Calystegia macrostegia* to Table 1;

2) REDUCTION of *Encelia californica*;

3) ADDITION of the following plants from "The Los Angeles Coastal Prairie, A Vanished Community" by Mattoni, R. and Longcore, T.R. (1997) to Table 2: *Chaenactis glabriuscula, Cryptantha clevelandii, Eschscholzia californica, Lupinus bicolor, Phacelia ramosissima, Pseudognaphalium biolettii* (previously *Gnaphalium bicolor).*

In addition, to reflect the recent change from hydroseeding to broadcast seeding, we have revised and attached Sheet 3 of the civil drawings. Please substitute the attached Sheet 3 for the one previously submitted in Appendix A of the April 2013 Ecological Landscape Plan.

It is my understanding that this is the last concurrence needed before your agency can

issue CDP No. 5-12-263. LAWA now awaits your agency's determination regarding the fulfillment of Special Condition No. 1 outlined in the Notice of Intent to Issue Permit No. 5-12-263, and the issuance of the permit. LAWA would like to kick off the project in July with volunteer weed removal and seed collection activities. We are looking forward to hearing from you soon.
Please contact Peggy Nguyen of my staff with any questions at PeggyNguyen@LAWA.org, or 424-646-6488.

Sincerely,

Robert D. Freeman
Airport Environmental Manager II

RDF:ELB:PHN:oc

Attachments: Revised Tables 1 and 2, and Appendix A Sheet 3 for CDIP Ecological Landscape Plan

cc: Michael Feldman (with attachments)
Ralph Morones (with attachments)
Russ Lewis (with attachments)
Ed Melara (with attachments)
Intissar Durham (with attachments)
Julie Sauter (with attachments)
Masih Hashemi (with attachments)
Kevin Merk (kmerk@kevinmerkassociates.com)

Z:LETTERSANDMEMOS:

Table 1. Coastal Dunes Improvement Project Coastal Dune Scrub Seed Mix

Scientific Name	Common Name	Approx. Quantity (LBS/Acre)
Abronia maritima	sand verbena	1.00
Abronia umbellata	pink sand verbena	1.00
Acmispon glaber (Lotus scoparius)	deer weed	0.25
Ambrosia chamissonis	beach bur	1.00
Calystegia macrostegia	coast morning glory	0.20
Calystegia soldanella	dune morning glory	0.20
Camissoniopsis chieranthifolia	dune primrose	1.00
Corethrogyne filaginifolia	common corethrogyne	0.50
Croton californicus	croton	0.50
Datura wrightii	jimsonweed	0.10
Distichlis spicata	salt grass	0.50
Encelia californica	California encelia	0.20
Ericameria erichoides	mock heather	1.00
Erysimum insulare	island wallflower	0.10
Eschscholzia californica	California poppy	0.20
Isocoma menziesii var. *vernonoides*	coast goldenbush	1.00
Isomeris arboreus	bladder pod	1.00
Lupinus chamissonis	silver bush lupine	0.25
	TOTAL	**10.00**

Table 2. Coastal Dunes Improvement Project Coastal Prairie/Grassland Seed Mix

Scientific Name	Common Name	Approx. Quantity (LBS/Acre)
Bromus carinatus var. *maritimus*	seaside brome	3.00
Chaenactis glabriuscula	yellow pincushion flower	0.25
Cryptantha clevelandii	common cryptantha	0.10
Distichlis spicata	salt grass	1.00
Eschscholzia californica	California poppy	0.20
Lupinus bicolor	bicolored lupine	0.20
Nassella cernua	nodding needlegrass	3.00
Phacelia ramosissima	branching phacelia	0.10
Pseudognaphalium biolettii	two-colored rabbit-tobacco	0.15
Vulpia microstachys	six weeks fescue	3.00
	TOTAL	**11.00**

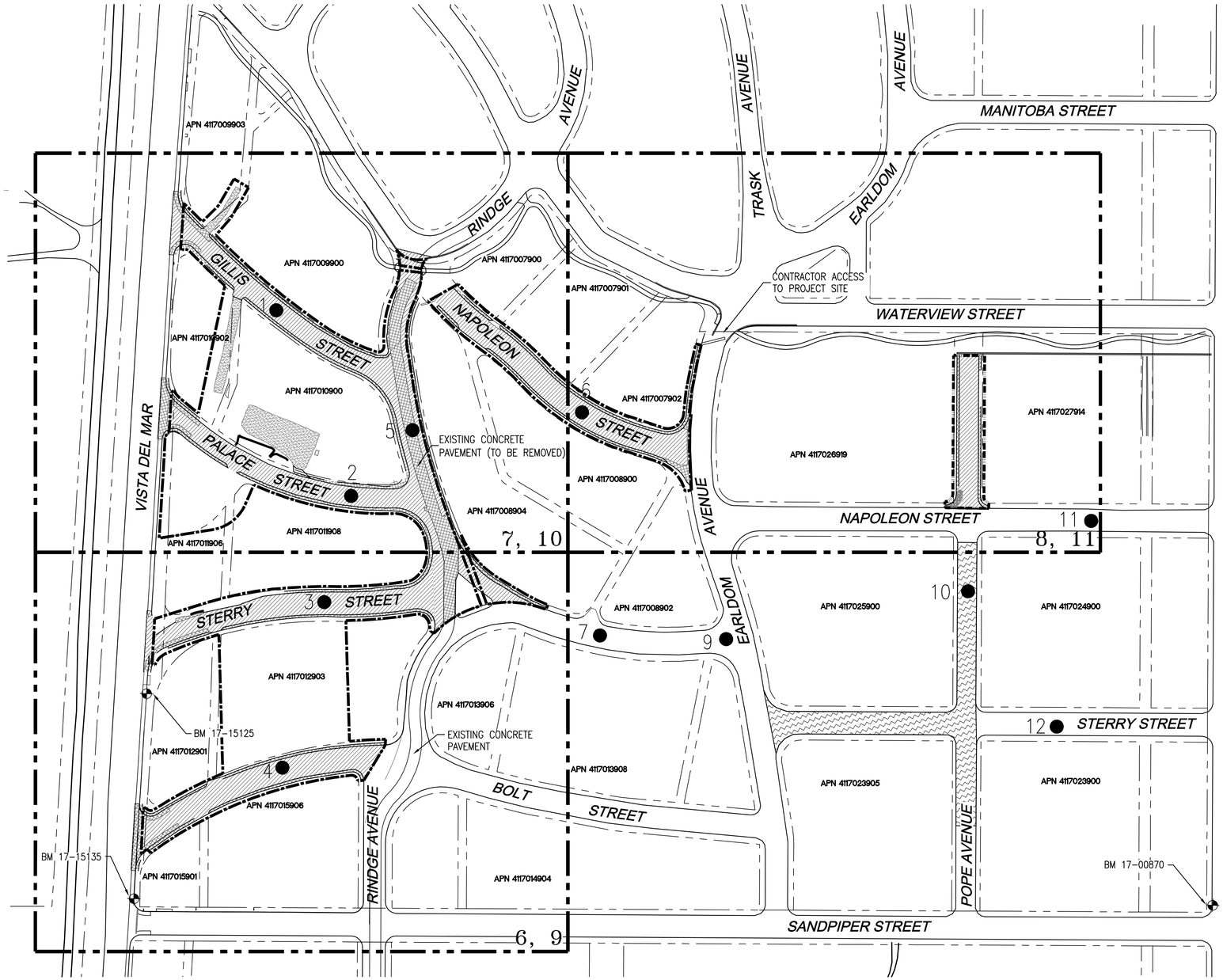

PARCEL INFORMATION

THE PROJECT IMPROVEMENTS SHOWN WITHIN THESE CONSTRUCTION DOCUMENTS AFFECT THE FOLLOWING ASSESSOR PARCELS AS SHOWN HEREON:

ASSESSORS PARCEL NUMBER	TRACT NO.	LOT NO.	BLOCK
4117007900	8557	1	45
4117007901	8557	10	45
4117007902	8557	15	45
4117008904	8557	23	46
4117009900	8557	26	–
4117009903	8557	12	41
4117010900	8557	11	48
4117010902	8557	19	48
4117011906	8557	14	–
4117011908	8557	10	–
4117012901	8557	17–22	51
4117012903	8557	1–15	–
4117015901	8557	7	52
4117015906	8557	1–8	52
4117026914	8557	16	38
4117027919	8557	20	43

BORE HOLE LOCATIONS AND SECTION THICKNESS OF PAVEMENT

BORE HOLE	LOCATION	MATERIAL	THICKNESS IN INCHES	SUBSECTION 1 PROFILE IN INCHES	SUBSECTION 2 PROFILE IN INCHES
1	GILLIS	ASPHALT	3.5	3.5 – 9 DG	9–12.5
2	PLACE	ASPHALT	3	3–9	
3	STERRY WEST	ASPHALT	4	4–12 DG	
4	BOLT WEST	ASPHALT	2	2–8	8–16 CLEAN SOIL
5	RINDGE	CONCRETE	6.5	6.5–13	
6	NAPOLEON MID	ASPHALT	3.5	3.5–12	12–18 AC GRINDINGS
7	STERRY MID	ASPHALT	4	4–11	
8					
9	EARLDOM	ASPHALT	4	4–8, 4–12 AC	
10	POE	ASPHALT	4	GRINDINGS	
11	NAPOLEON EAST	ASPHALT	4	4–11	
12	STERRY EAST	ASPHALT	4	4–12 DG	12–18

NOTE:
BORE HOLE AND SECTIONAL THICKNESS INFORMATION PREPARED BY WALLACE LABORATORIES, LLC. (FEBRUARY 2010)

BENCHMARK

BM 17–15125: WIRE SPIKE IN EAST CURB OF VISTA DEL MAR, 38.6' SOUTH OF CURB RETURN BC; LOCATED SOUTH OF STERRY STREET, 0.30 MILES SOUTH OF WATERVIEW STREET.

BM 17–15135: WIRE SPIKE IN EAST CURB OF VISTA DEL MAR, 1.30' NORTH OF CURB RETURN BC; LOCATED NORTH OF SANDPIPER STREET, 0.39 MILES SOUTH OF WATERVIEW STREET.

BM NO. 17–15125
ELEVATION = 47.283 (NGVD 29, 1985 ADJ.)
N: 1804039.36
E: 6426848.18

BM NO. 17–15135
ELEVATION = 52.198 (NGVD 29, 1985 ADJ.)
N: 1803713.07
E: 6427006.47

BM NO. 17–00870
N: 1804638.11
E: 6428670.92

BASIS OF BEARINGS

THE PROJECT BASIS OF BEARINGS IS THE MEASURED BEARING OF N25°52'44"W BETWEEN BM 17–15135 AND BM 17–15125.

A CONSTRUCTION CENTERLINE ALONG VISTA DEL MAR HAS BEEN ESTABLISHED HERON WITH A MEASURED BEARING OF N25°52'40"W THE RECORDED BEARING ALONG VISTA DEL MAR IS N26°04'38"W AS IDENTIFIED IN THE CITY OF LOS ANGELES SURVEY FIELD BOOK 093–153.

LEGEND

- ASPHALT PAVEMENT REMOVAL
- CONCRETE REMOVAL
- CONTRACTOR LAYDOWN AREA
- COASTAL DUNE SCRUB BROADCAST SEEDING BY HAND BOUNDARY
- COASTAL PRAIRIE/GRASSLAND BROADCAST SEEDING BY HAND BOUNDARY

PLAN

SCALE: 1"=100'

Underground Service Alert of Southern California
Call: TOLL FREE 811
TWO WORKING DAYS BEFORE YOU DIG

IN CONNECTION WITH REVOCABLE PERMIT R-1185-0024: VISTA DEL MAR AT GILLIS STREET, PALACE STREET, STERRY STREET AND BOLT STREET.

IN CONNECTION WITH LADBS PLAN CHECK NO. G12LA00046

REGISTERED PROFESSIONAL ENGINEER DONALD C. WEBER No. C71238 Exp. 06-30-13 CIVIL STATE OF CALIFORNIA

PLANS PREPARED BY:
AECOM
999 Town and Country Road
Orange CA 92868
Phone: 714.567.2501
Fax: 714.567.2441
www.aecom.com

CITY OF LOS ANGELES
DEPARTMENT OF PUBLIC WORKS
BUREAU OF ENGINEERING

LA DPW ENGINEERING "Building for Tomorrow Today"

NO.	REVISIONS:	DATE:	BY:
1	REVISED TO BROADCAST SEEDING		
2	REVISED LEGEND AND ASSOCIATED HATCHING		
3	ADDED ASSESSOR PARCEL INFORMATION		

WORK ACCEPTED
SERIAL NO.
B - PERMITS BR402503
INDEX NO.

BUREAU OF ENGINEERING APPROVAL
OFFICE: WEST L.A. DISTRICT
CHECKED BY: (PRINTED NAME)
SIGNATURE: DATE:

AECOM DESIGN GROUP
ENGINEER: DONALD C. WEBER, PE
DESIGNED BY: DARCY SULZ
DRAWN BY: DARCY SULZ
CHECKED BY: DONALD C. WEBER, PE
APPROVED BY: JOHN BEHZADI, PE

VERTICAL CONTROL: BM 17-15135, NGVD29, 1985 ADJ
HORIZONTAL CONTROL: NAD 83 STATE PLANE COORDINATES, ZONE V

SHEET TITLE: OVERALL SITE PLAN
PROJECT: COASTAL DUNES IMPROVEMENT PROJECT
ADDRESS: 7600 BLOCK OF VISTA DEL MAR PLAYA DEL REY, CA 90293

PROJECT NO.
DRAWING NO. 3
SHEET 3 OF 18 SHEETS

THE CITY OF LOS ANGELES OR ITS OFFICERS OR AGENTS SHALL NOT BE RESPONSIBLE FOR THE ACCURACY OR COMPLETENESS OF ELECTRONIC COPIES OF THIS PLAN SHEET.

REVISION DATES (DESIGN STAGE ONLY)

Sheet Version 4.01 2-2005

TABLE OF CONTENTS

Page

1.0 INTRODUCTION 1

2.0 DUNES IMPROVEMENT PROJECT OVERVIEW 3
2.1 Street Removal and Minor Grading 3
2.2 Schedule 5

3.0 EXISTING CONDITIONS 5
3.1 Habitat Types 6
3.2 Soils 9
3.3 Special Status Biological Resources 9

4.0 IMPACT ASSESSMENT AND PROPOSED MITIGATION MEASURES 14

5.0 ECOLOGICAL LANDSCAPE PLANTING PLAN 18
5.1 Landscape Planting Plan Overview 18
5.2 Propagule Source 20
5.3 Site Preparation 21
5.4 Plant Material Installation 21
5.5 Seeding and Planting Specifications 21
5.6 Fertilization 24
5.7 Herbivore Protection 24
5.8 Remedial Seeding and Planting 24
5.9 Erosion 25

6.0 MAINTENANCE PROGRAM 25
6.1 Initial Care of Newly Vegetated Areas 25
6.2 Non-Native Weed Abatement Program 25
6.3 Irrigation 26

7.0 SUCCESS CRITERIA AND MONITORING PROGRAM 28
7.1 Final Success Criteria 28
7.2 Monitoring Program 28
7.3 First Year Monitoring Activities 29
7.4 Wildlife 29
7.5 Natural Recruitment of Native Plant Species 30
7.6 Use of Reference Sites 30
7.7 Photo Documentation 30
7.8 Reporting 30
7.9 Inspections of the Landscaping Area 30

8.0 COMPLETION OF ECOLOGICAL LANDSCAPING REQUIREMENTS 31
8.1 Notification of Completion 31
8.2 Coastal Commission Confirmation 31

9.0 CONTINGENCY MEASURES/ADAPTIVE MANAGEMENT 31

10.0 FUNDING MECHANISM/RESPONSIBLE PARTY 32

11.0 REFERENCES 32

List of Figures

Figure 1 – Site Location Map 2
Figure 2 – Hardscape Removal Map 4
Figure 3 – Habitat Map 7
Figure 4 – CNDDB Botanical Resources Map 11
Figure 5 – CNDDB Wildlife Resources Map 13
Figure 6 – Habitat Impact Map 16
Figure 7 – Planting Plan Overview Map 19
Figure 8 – Non-Native Plant Occurrence Map 27

List of Tables

Table 1. Coastal Dunes Improvement Project Coastal Dune Scrub Seed Mix 23
Table 2. Coastal Dunes Improvement Project Coastal Prairie/Grassland Seed Mix 23
Table 3. Annual Performance Standards 28

List of Appendices

Appendix A – Coastal Dunes Improvement Project Onsite Demolition and Grading Plans, Offsite Improvement Plans (prepared by AECOM)

Appendix B – Results of California Natural Diversity Data Base Query

1.0 INTRODUCTION

The LAX Master Plan Stipulated Settlement Agreement (SA) requires the City of Los Angeles to implement a landscaping project in the northern portion of the Los Angeles/El Segundo dunes owned by Los Angeles World Airports (LAWA) in order to improve the view from adjacent homes. Specifically, the SA requires the City of Los Angeles to 1) remove as much existing pavement as possible from abandoned streets and sidewalks; and 2) plant appropriate native vegetation in that area. Inasmuch as the SA provides a set budget for fulfillment of this obligation, the implementation plan will prioritize the most essential tasks needed to comply with the requirements.

Los Angeles World Airports proposes the Coastal Dunes Improvement project for fulfillment of this obligation. The project site is the approximately 48.25 northernmost acres of the Los Angeles/El Segundo Dunes located west of Pershing Drive; south of Waterview Street, Rindge Avenue, and Napoleon Streets; and north of Sandpiper Street. Vista Del Mar forms the site's western boundary. Please refer to Figure 1.

The proposed project site is located within the Coastal Zone, and therefore is being designed to comply with requirements set forth by the California Coastal Commission pursuant to the California Coastal Act (1976). The Coastal Commission, as a permitting authority, protects environmentally sensitive habitat areas (ESHAs) through implementation of the Coastal Act, Chapter 3, Section 30240. Only resource-dependent uses including trails, small-scale educational elements (i.e., panels/signage, kiosks, etc.), and habitat restoration are allowed in ESHA. The dune scrub habitat in the undeveloped areas of the site (approximately eight widely dispersed acres out of 48.25 total acres) was identified as potential ESHA, and bare sands in these areas were also considered a component of the ESHA.

Streets, aboveground and underground utilities, and some concrete foundations and retaining walls still remain onsite. The proposed project will remove approximately four (4) acres of pavement from streets between Vista Del Mar and Pershing Street to improve the view from adjacent residences and from Vista Del Mar. City-approved onsite demolition and offsite improvement plans were attached to the application and included as Appendix A of this document to illustrate the extent of earth disturbance activities and initial erosion controls associated with the project.

The dune sands (previously developed as a residential neighborhood in the 1950s and later cleared in the 1970s) including some isolated patches of dune scrub habitat in good condition, would be temporarily impacted by the proposed project during the removal of the streets and remaining hardscapes. The proposed program, however, will successfully mitigate the temporary impacts to ESHAs resulting from project implementation, ultimately creating higher quality dune habitat functions and values than what currently exist on this disturbed site.

Disturbance areas resulting from grading activities associated with removal of streets and remnant hardscapes will be restored with native dune vegetation, and a weed abatement program will enhance existing areas of native dune habitat while opening up additional areas for native plants to become established. Regularly scheduled weed abatement efforts will focus on the most invasive species and will continue as-needed until the seeded

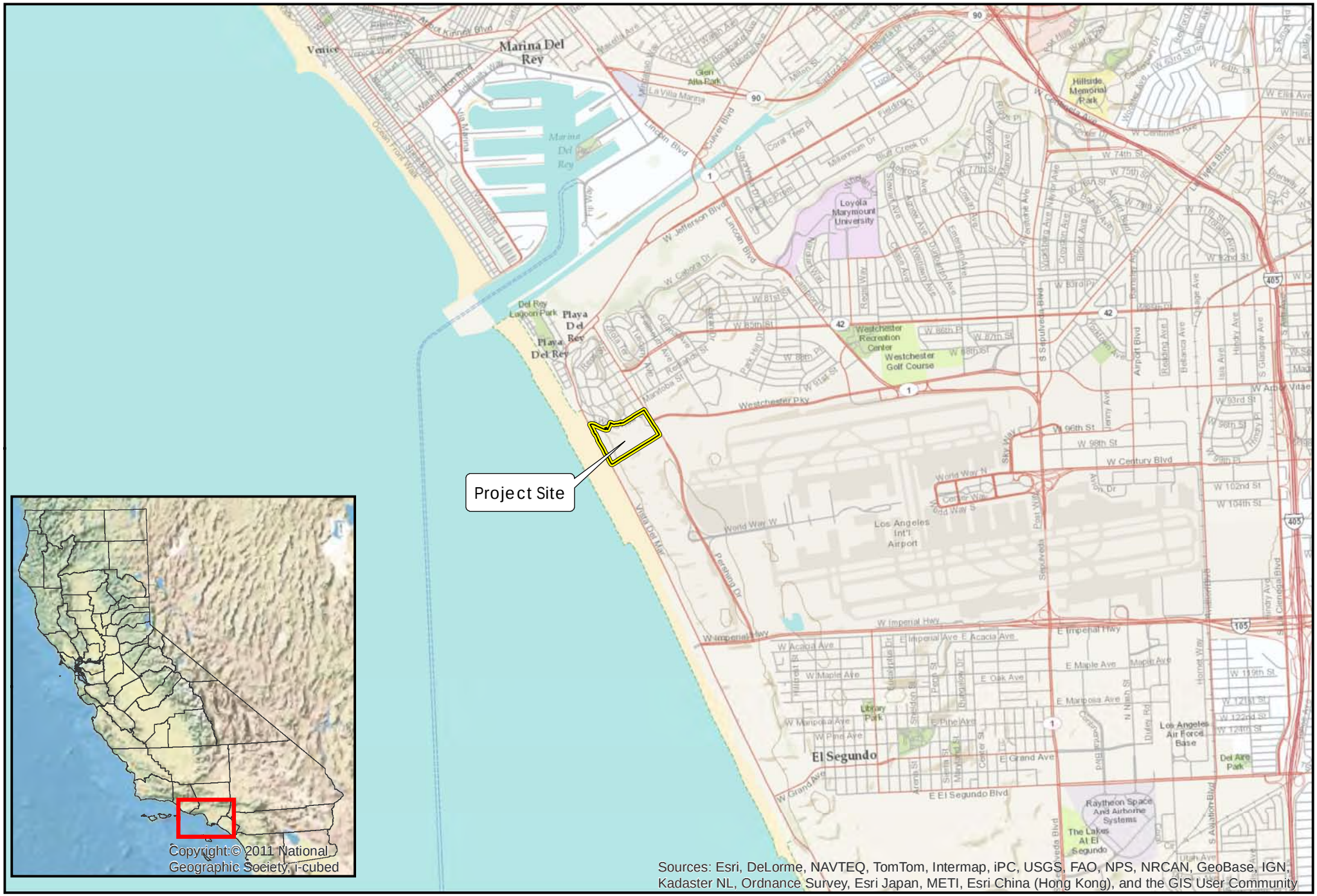

sage institute

KMA
Kevin Merk Associates, LLC

map updated
March 2013

3,000 1,500 0 3,000 Feet
520 260 0 520 1,040 Meters

1 inch = 4,167 feet

Coastal Dunes Improvement Project

Los Angeles World Airport

Figure 1

PROJECT LOCATION MAP

vegetation becomes established. Monitoring will consist of logging of weed abatement and seeding efforts and assessment of vegetation cover annually. A final report will be prepared and submitted to the Coastal Commission the fifth year following seeding and restoration efforts to confirm the success criteria were met.

Native seeds will be sowed in locations that enable LAWA staff or the contractor to conduct establishment-period irrigation, as necessary, and weed management activities in the most cost-efficient manner possible. LAWA's long-term vision for the project site includes continued restoration and enhancement efforts using seed during the first phase of the program. Future phases will emphasize removal of invasive non-native species, and may include further seeding, nursery propagation of and outplanting of container stock from site collected seed, transplanting in-situ seedlings (thinning) and litter (inoculation) during the winter months in future years.

The benefits of the Coastal Dunes Improvement program include:

- Creation of self-sustaining dune habitat dominated by native species;
- Reduction of non-native species and their propagules;
- Restoration and enhancement of southern foredunes, dune scrub and dune scrub/coastal prairie ecotone habitats on the site;
- Overall gain in coastal dune habitat functions and values as a result of the proposed project; and
- Aesthetic view enhancement of the project site from adjacent areas.

2.0 DUNES IMPROVEMENT PROJECT OVERVIEW

The proposed project will restore and enhance the natural dune system and includes:

1) removal of the existing roads within specific areas of the site and restoration of curbs on Vista Del Mar and Napoleon (please refer to the City-approved Coastal Dunes Improvement Project plans included as Appendix A);
2) minor grading adjacent to road removal areas to blend the existing topography of the surrounding areas and acquire dune sands to "top-dress" the road removal areas; and
3) sand stabilization/erosion control through the use of biotechnical approaches, including the placement of straw wattles (also known as fiber rolls), followed by the seeding of native vegetation.

2.1 Street Removal and Minor Grading

The following hardscape will be removed (please refer to Figure 2):

- Napoleon Street west of Earldom Avenue (a narrow 10-foot wide maintenance access path will remain to service existing FAA infrastructure in the area);
- Gillis Street west of Rindge Avenue;
- Palace Street west of Rindge Avenue;
- Sterry Street west of Rindge Avenue;

sage institute
KMA
Kevin Merk Associates, LLC

map updated
March 2013

190 95 0 190 Feet
30 15 0 30 Meters
1 inch = 200 feet

Coastal Dunes Improvement Project

Los Angeles World Airport

Figure 2

HARDSCAPE REMOVAL MAP

- Bolt Street west of Rindge Avenue;
- Rindge Avenue south of Napoleon Street and north of Sterry Street (10' wide dirt/Decomposed Granite service access path to be maintained between Sterry and fenceline; trail connection and native landscape to be restored at intersection of Rindge and Napoleon where Rindge currently intersects pedestrian trail);
- Selected retaining walls and foundations; and
- Poe Avenue (between Napoleon Street and Waterview Street).

2.2 Schedule

The project as described herein is the removal of roads and hardscapes to comply with the SA. It is anticipated that the street demolition component of the project will commence in the late summer of 2013. The initial stage of the program will be conducted by a contractor, and will include the removal of streets and hardscapes as detailed above, along with select removal of non-native species that are in the immediate work area.

LAWA's Environmental Services Division is currently conducting weed management and eradication activities throughout their portion of the El Segundo Dunes, which includes the project site. Seed collection of native dune scrub species will occur throughout the spring and summer months to provide material not only for use in the seeding effort for the road and hardscape removal project, but also for propagation and developing container stock to be planted onsite over the coming years. A small, temporary nursery will be setup on existing roadways on LAX property and in adjacent "sand beds" currently dominated by non-native invasive species where the easily accessible "sand beds" will be used as sites for in-situ propagation of seedlings. Seedlings will be temporarily transplanted to containers for transplant to another desirable location within the project site.

As stated above, following road and hardscape removal the area will be stabilized in the late fall or early winter 2013 with fiber rolls and hydroseed composed of mulch, tackifier, and site collected seed from intact coastal dune scrub habitat onsite. Additional seed collection sites have been identified further south within the El Segundo Blue Butterfly Preserve.

Following sand stabilization and the application of seed, the monitoring program will be initiated to ensure the appropriate vegetation becomes established, and to identify areas to focus the seasonally-timed weed abatement program. This will occur on an annual basis for the coming years until the final success criteria established in this Plan is met. A project completion report will be prepared and submitted to the Coastal Commission as required in the Coastal Development Permit after the fifth monitoring year.

3.0 EXISTING CONDITIONS

The project site occupies the northernmost portion of the El Segundo Dunes immediately west of LAX. Numerous studies have occurred on the project site and in the greater El Segundo Dunes Complex in support of ongoing airport planning activities and to characterize this locally important landform. For detailed site specific and existing conditions information, results of past botanical and wildlife surveys, and special status biological resource occurrence maps please refer to the following documents:

- Species Diversity and Habitat Evaluation Across the El Segundo Sand Dunes at LAX (Mattoni, 1990);
- Natural and Restorable Fragments of the Former El Segundo Sand Dunes Ecosystem (Mattoni, 1993);
- LAX Master Plan Supplement to the Draft EIS/EIR Appendix S-H. Updated Biological Assessment Technical Report (Sapphos Environmental, Inc., 2003); and
- LAX Master Plan Final EIS/EIR including Appendix A-3c (Sapphos Environmental, Inc., 2005).

3.1 Habitat Types

Two primary habitat types, or plant communities, are present within the project site, and include Annual Wild Oat/Brome Grassland and Dune Lupine Scrub. In addition, ruderal areas consisting of paved roads, road shoulders, residential infrastructure, and an old construction staging site are also present. The characterizations of these plant communities generally follow those of Holland's (1986) vegetation classification system and the plant community descriptions in the Manual of California Vegetation, second edition (Sawyer, Keeler-Wolf, and Evens; 2009). Other mapped features onsite include horticultural plantings of Acacia (*Acacia cyclops*), elm (*Ulmus* sp.), palm trees (various species), Monterey cypress (*Hesperocyparis macrocarpa*) and eucalyptus (*Eucalyptus* spp.), as well as non-native plant occurrences (i.e.: ice plant, Kikuyu grass, and long-beaked filaree). The following discusses the habitat types and plant occurrences delineated on Figure 3, and provides a characterization of the existing conditions of the project site.

3.1.1 Annual Wild Oat/Brome Grassland

This habitat type on the project site corresponds to the Non-Native Annual Grassland described by Holland and the Annual Wild Oats and Mixed Brome Grassland described in the Manual of California Vegetation (2009, second edition). The annual grassland onsite was dominated by wild oats (*Avena barbata*), with ripgut brome (*Bromus diandrus*), soft chess (*Bromus hordeacous*), and patchy occurrences of California croton (*Croton californica*) also present.

California coastal grasslands provide foraging, breeding habitat and movement corridors for many wildlife species. Given the site's proximity to existing development and the fact that it is surrounded by chain link fencing, the onsite grasslands do not provide movement corridors. Evidence of Botta's pocket gopher (*Thomomys bottae*) was present within the project site, and a red fox (*Vulpes vulpes*) was observed during field reconnaissance traversing the onsite grassland habitat. Numerous invertebrate species (such as insects), many of which provide a food source for larger animals such as lizards, birds and some small mammals can also be found within grassland communities. A variety of birds rely on open expanses of grasslands for foraging habitat. Grasslands that are bordered by habitats containing trees are particularly important for raptors because the birds can use the large trees as nesting, roosting, and observation points to locate potential prey within nearby grassland habitats.

3.1.2 Dune Lupine Scrub

Dune Lupine Scrub habitat on the project site corresponds to the Southern Dune Scrub and Southern Foredunes habitat types described by Holland (1986). The Silver Bush Lupine –

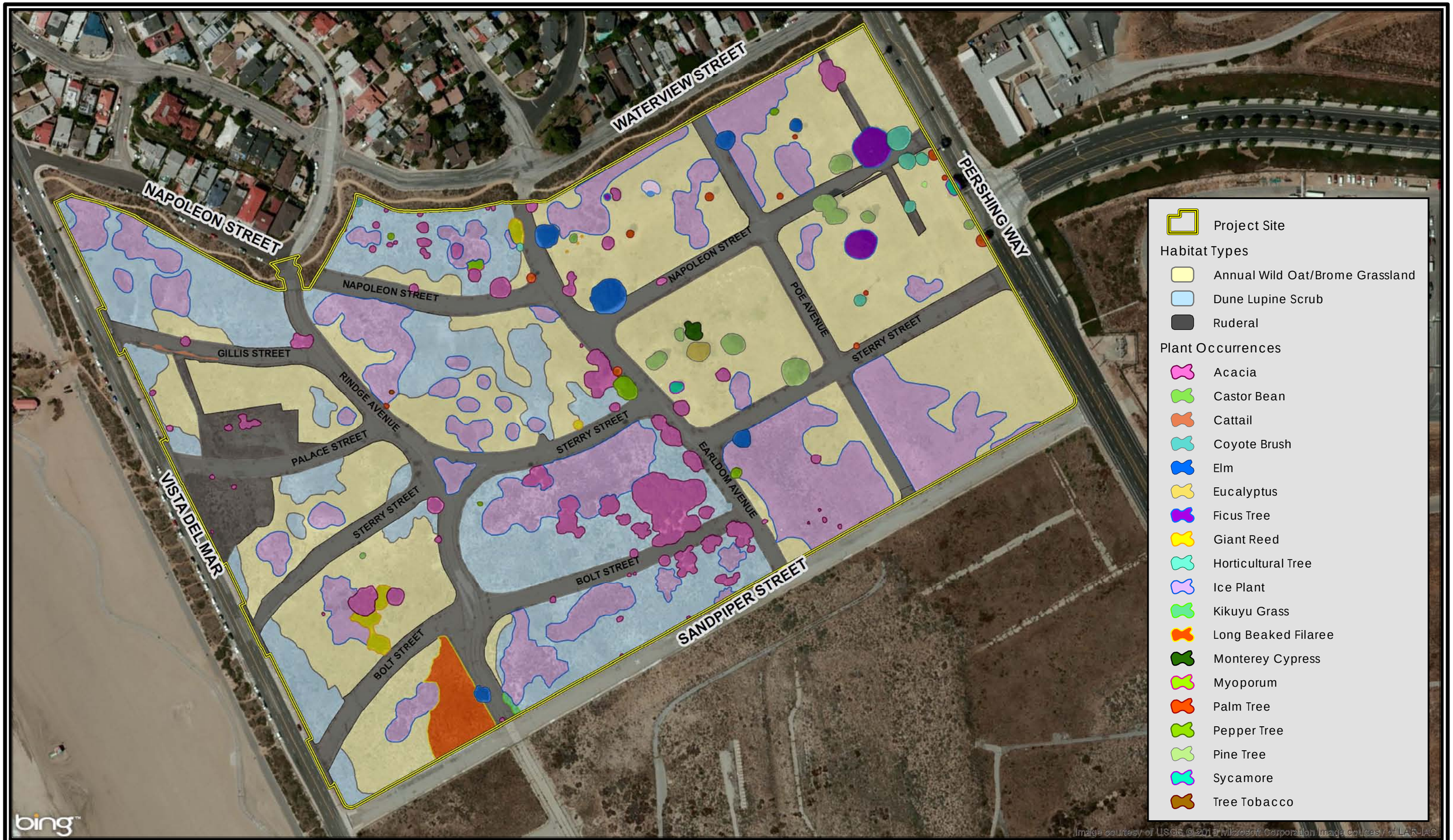

sage institute

KMA
Kevin Merk Associates, LLC

map updated
March 2013

200 100 0 200 Feet
30 15 0 30 Meters
1 inch = 200 feet

Coastal Dunes Improvement Project

Los Angeles World Airport

Figure 3

HABITAT MAP

Mock Heather Scrub habitat described in the Manual of California Vegetation, Second Edition (Sawyer et al., 2009) most accurately depicts the onsite dune scrub habitat, however, mock heather (*Ericameria californica*) is almost entirely absent from the site. Dune Lupine Scrub habitat onsite consisted almost entirely of silver dune lupine (*Lupinus chamissonis*) shrubs scattered in varying densities on sandy soils. Following removal of homes from the project site in the 1970's, the dune sands were recolonized by elements of the native dune habitat. The recolonization effort was limited in species composition and diversity, and primarily consists of silver dune lupine and California croton intermixed in a sea of non-native grasses and forbs.

Wildlife habitat in the dune scrub plant community onsite is expected to be similar to that described above for the grassland habitat type. Given the shrubs are small in size and patchy in nature (i.e., do not provide a significant amount of cover), the onsite dune lupine plants are not expected to provide the same level of habitat quality as intact coastal scrub habitat further south in the El Segundo Blue Butterfly Habitat Preserve. While a number of bird species may frequent the site, very few reptile or larger mammal species have been observed within the project area to date. One occurrence of silvery legless lizards was observed near the proposed road removal area, and red fox have also been observed onsite (P. Nguyen personal communication).

3.1.3 Ruderal

The existing roads were mapped as Ruderal habitat. In many areas, the existing roads are cracked with weedy vegetation present. Ruderal habitat is not a native plant community, nor is it described by the vegetation classification systems cited above since it is an anthropogenic influenced land type. Ruderal, or disturbed areas, on the project site were mostly devoid of plant cover. Along road margins, high concentrations of invasive, non-native species were present, likely due to the historic disturbance. Some plants characteristic of the onsite annual grassland habitat described above were present, in addition to dominant weedy species such as long-beaked filaree (*Erodium botrys*), castor bean (*Ricinus communis*), and old horticultural plantings spilling into the street. Because of the highly disturbed nature of this habitat, it is of marginal value to wildlife.

3.1.4 Horticultural Plantings

Within the south-central part of the site, Acacia was the primary horticultural planting observed. It has naturalized onsite, and forms a relatively large occurrence just west of Earldom Avenue in between Sterry Street to the north and Sandpiper Street to the south. Further east in the flatter portions of the site, numerous planted trees and shrubs still persist including various species of palm, elm, eucalyptus and Monterey cypress. These trees and shrubs provide perching and nesting opportunities for a variety of birds. One large stick nest occupied by a red-tailed hawk (*Buteo jamaicensis*) was observed in a Monterey cypress tree near Earldom Avenue between Napoleon Street to the north and Sterry Street to the south.

3.1.5 Non-Native Plant Occurrences

Non-native plant species occurrences with a large enough relative areal cover to be seen in the aerial photograph used as the base map for the Habitat Map included as Figure 3 were

mapped based on vegetation signature and field work. A suite of non-native plants persist on the project site that for the most part, out-compete and preclude native species. Figure 3 illustrates the areal extent of the dominant non-native plants observed onsite.

3.2 Soils

The Natural Resources Conservation Service (NRCS) Web Soil Survey was reviewed to determine the soil mapping units present within the study area (U.S. Department of Agriculture 2012). No soil data was available on the USDA's Web Soil Survey for the project site or general area. Based on past studies of the site including an Agronomist Report prepared by Wallace Laboratories (2011), the western portion of the site supports primarily dune sands typical of the El Segundo Dunes Complex. On the eastern portion of the site, the soils apparently transition into a more silty sandy loam complex as evident by the dominance of herbaceous grasses and forbs.

3.3 Special Status Biological Resources

The Los Angeles area historically supported numerous special status, or rare, plant communities, and species of plants and animals. Even though many of the special status biological resources have been extirpated from the area, the El Segundo Dunes and nearby Ballona Wetlands provide a refuge for these rare species. For the existing conditions characterization of the project site, our investigation used a five and ten mile search radius surrounding the site to identify special status resources from the area, and to overcome the limitations with the California Natural Diversity Data Base (CNDDB). Appendix B provides a table with the CNDDB occurrence data. The following discussion provides further detail regarding the special status biological resources occurring or potentially occurring on the project site.

For the purpose of this report, special status species are those plants and animals listed, proposed for listing, or candidates for listing as Threatened or Endangered by the U.S. Fish and Wildlife Service (USFWS) under the federal Endangered Species Act (ESA); those listed or proposed for listing as Rare, Threatened, or Endangered by the California Department of Fish and Wildlife (CDFW) under the California Endangered Species Act (CESA); animals designated as "Species of Special Concern," "Fully Protected," or "Watch List" by the CDFW; and plants occurring on California Rare Plant Rank 1, 2, 3 and 4 developed by the CDFW working in concert with the California Native Plant Society (CNPS). The specific code definitions are as follows:

- *Rank 1A = Plants presumed extinct in California;*
- *Rank 1B.1 = Rare or endangered in California and elsewhere; seriously endangered in California (over 80% of occurrences threatened/high degree and immediacy of threat);*
- *Rank 1B.2 = Rare or endangered in California and elsewhere; fairly endangered in California (20-80% occurrences threatened);*
- *Rank 1B.3 = Rare or endangered in California and elsewhere, not very endangered in California (<20% of occurrences threatened or no current threats known);*
- *Rank 2 = Rare, threatened or endangered in California, but more common elsewhere;*

- *Rank 3 = Plants needing more information (most are species that are taxonomically unresolved; some species on this list meet the definitions of rarity under CNPS and CESA); and*
- *Rank 4.2 = Plants of limited distribution (watch list), fairly endangered in California (20-80% occurrences threatened).*
- *Rank 4.3= Plants of limited distribution (watch list), not very endangered in California.*

In addition, sensitive natural communities are those plant communities listed as rare in the CNDDB queried in August 2011 and again in October 2012.

The evaluation of special status animal species and identification of habitat that could support these species was based on our field observations and knowledge of the species biology. This investigation occurred during the summer of 2011, with subsequent field visits in the winters of 2012 and 2013. Definitive surveys for the presence or absence of the animal species that may occur within the project area were not conducted. Further, we relied on existing information and survey data from past investigations on and in the project area to help conclude whether or not certain special status animals were expected to occur onsite. Known occurrence records in the region coupled with our site-specific observations were used to make presence/absence determinations for special status species potentially occurring onsite. This information was used to tailor impact avoidance and minimization measures to be implemented during project construction.

The U. S. Fish and Wildlife Service's online Wetland and Critical Habitat Mappers (http://www.fws.gov/wetlands/Data/Mapper.html and http://criticalhabitat.fws.gov/crithab/) were also reviewed to evaluate the extent of documented wetlands and designated critical habitat defined in the region.

3.3.1 Special Status Natural Communities

The CNDDB search identified Southern Coastal Salt Marsh and Southern Dune Scrub as two special status natural communities occurring in the project area. Based on review of background studies from the project area, Vernal Pool habitat is also present in the region. Following site reconnaissance, it was determined that only elements of Southern Dune Scrub habitat were present onsite. The extent of silver dune lupine shrubs on the project site was mapped and is shown as Dune Lupine Scrub on Figure 3. No other special status plant communities are present onsite.

3.3.2 Special Status Plants

The CNDDB contains records of many special status plant species that are known to occur within the greater Los Angeles area, many of which are historical records of plant occurrences that have been extirpated by development. Please refer to Figure 4 – CNDDB Botanical Resources for the search results in the project area. The remaining extant special status plant occurrences have highly localized habitat requirements such as stabilized coastal dunes, vernal pools or brackish marsh habitats.

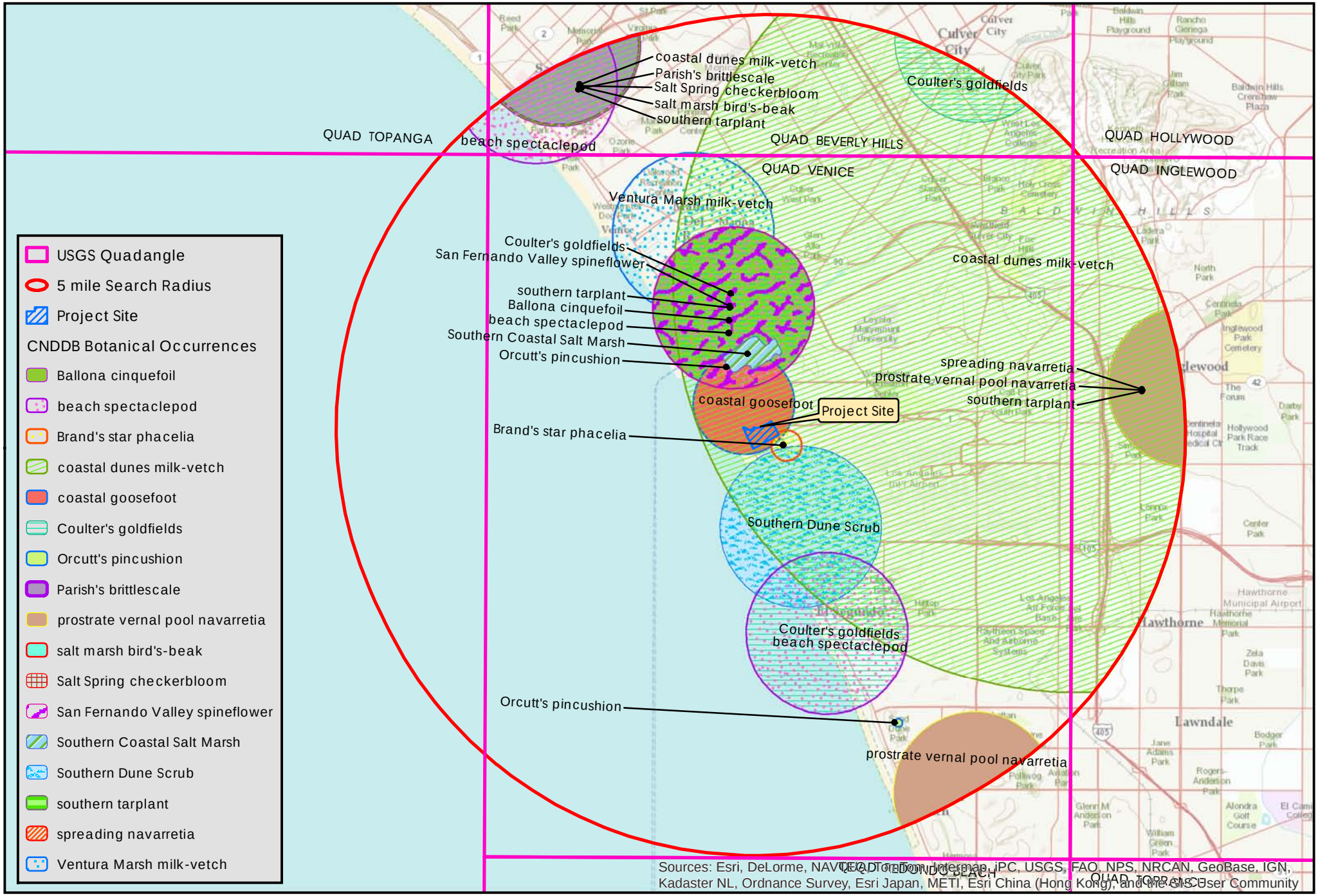

sage institute

KMA
Kevin Merk Associates, LLC

map updated
Sept 2012

5,700 2,850 0 5,700 Feet
1,000 500 0 1,000 2,000 Meters
1 inch = 8,000 feet

source(s): CDFG, CNDDB, Feb 2012

Coastal Dunes Improvement Project

Los Angeles World Airport

Figure 4

CNDDB
Botanical Resources

Species identified in the area by the CNDDB that are known to occur on coastal dune habitats include: beach spectaclepod (D*ithyrea maritima*; state Threatened), Brand's star phacelia (*Phacelia stellaris*; Federal Candidate), and Orcutt's pincushion (*Chaenactis glabriuscula* var. *orcuttiana*; CRPR 1B.1). Two additional special status species were also identified within the project area and include Lewis' evening primrose (*Camissonia lewisii*; CRPR 3), California spineflower (*Mucronea californica*; CRPR 4.2), and branching phacelia (*Phacelia ramosissima* var. *austroliteralis*; CRPR 3.2). While these three species met the rarity definition included for this investigation, these species are California Rare Plant Rank 4 species and are not rare from a CEQA perspective.

Surveys to date within the project site have not located beach spectaclepod, Brand's star phacelia, branching phacelia, Orcutt's pincushion flower, or California spineflower within the project study area, and thus, they are not expected to occur within the proposed disturbance area. Only Lewis' evening primrose has been observed in the western portion of the project site. Additional botanical surveys will be conducted in spring and summer 2013 as part of project implementation to identify if this species is still present onsite. If present, its seed shall be collected and included in the revegetation effort post road removal as detailed below in the Impact and Mitigation discussion. Seedlings and small plants may be transplanted to other areas of the project site that will not be disturbed or to the in-situ nursery.

3.3.3 Special Status Wildlife

The CNDDB has occurrence data for numerous special status animal species in the general area (please see Appendix B). Please refer to Figure 5 for the special status wildlife occurrence data that were evaluated in this study. Similar to the plant evaluation above, the majority of these special status animals are not expected to occur on the subject site due to the lack of suitable habitat. Species such as the California black rail (*Rallus longirostris obsoletus*; state Threatened) and western snowy plover (*Charadrius alexandrines nivosus*; federal Threatened) are known to occur west of the project site on Dockweiler State Beach, and while they could potentially occur onsite as rare transients, they are not expected to nest on the property because suitable habitat is not present. Moreover, there are many shore birds such as the California least tern (*Sternula antillarum browni*; federal and state Endangered) listed in the CNDDB that occur along the coast and in the greater Santa Monica Bay region west of the study area that would not be found on the project site due to the lack of suitable nesting habitat.

Many avian species are known from the general area and could potentially utilize the grassland and dune scrub habitats in the El Segundo Dunes for nesting and foraging. The project site, however, does not have well-developed native habitat that would likely support scrub dependent species. Given the large expanses of open habitat in the El Segundo Dunes, many of the special status birds known from the general area could potentially occur on the property at least as transients moving through the region seasonally. This would be the case for the coastal California gnatcatcher (*Polioptila californica californica*, a federal threatened species). While suitable breeding habitat is not present onsite for the coastal California gnatcatcher, it has been seen in the general area.

Ground nesting birds and small songbirds could potentially use the site for nesting activities. Special status species identified in the CNDDB such as the burrowing owl (*Athene*

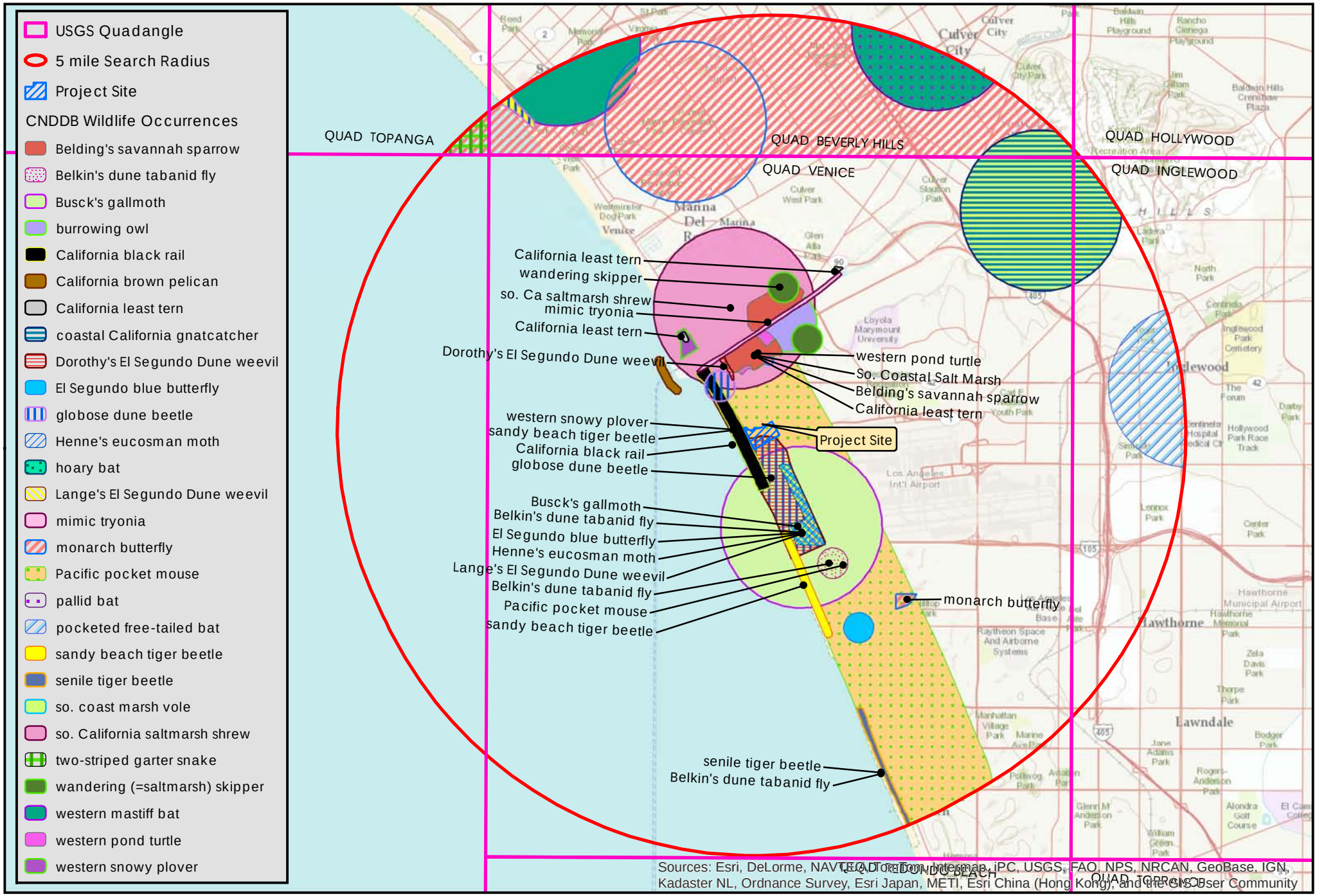

sage institute

KMA
Kevin Merk Associates, LLC

map updated
Sept 2012

5,700 2,850 0 5,700 Feet
1,000 500 0 1,000 2,000 Meters
1 inch = 8,000 feet

source(s): CDFG, CNDDB, Feb 2012

Coastal Dunes Improvement Project

Los Angeles World Airport

Figure 5

CNDDB
Wildlife Resources

cunicularia; Species of Concern) could also occur onsite seasonally. Burrowing owl sightings have occurred on LAX property during past studies, but they were transients moving through the area. Nesting by burrowing owl has not been documented from the site to date. Although not included in the CNDDB, the loggerhead shrike (*Lanius ludovicianus*; Species of Concern) is another species that has been observed onsite (P. Nguyen personal communication). It is possible that this species could occur onsite, but would not be expected to nest within the proposed project area due to lack of suitable habitat onsite.

Bats, such as the western mastiff bat (*Eumops perotis californicus*), silver-haired bat (*Lasionycteris noctivagans*), and hoary bat (*Lasiurus cinereus*) could forage over and around the site, as well as roost in the large trees in the eastern part of the site. Some of the non-native horticultural trees will be removed over time as part of the project gradually to prevent adverse impacts to bats as well as outside the nesting season for tree nesting bird species.

Based on the presence of suitable sandy soils, the legless lizard (*Anniella pulchra*; Species of Concern) and coast horned lizard (*Phrynosoma blainvillii*; Species of Concern) are likely to occur in the Dune Lupine Scrub habitat mapped onsite. The heavier soils in the eastern part of the property may preclude fossorial (burrowing) reptiles such as the legless lizard but avoidance and minimization measures are proposed prior to and during construction to prevent impacts to these reptile species.

There are several insects that are known to occur in the El Segundo Dunes Complex, the most notable being the El Segundo Blue Butterfly (*Euphilotes battoides allyni*; federal Endangered). This species requires the presence of coastal buckwheat (*Eriogonum parvifolium*) to provide egg laying sites as well as foliage and flowers for larval development and nectar sources for adults. Surveys of the project site did not locate any buckwheat species, and therefore, the El Segundo Blue Butterfly is not expected to occur onsite at this time. Other insects of interest included in the CNDDB have no formal state or federal listing. This includes species such as Henne's eucosman moth (*Eucosma hennei*), Lange's El Segundo Dune weevil (*Onychobaris langei*), El Segundo flower-loving fly (*Rhaphiomidas terminatus terminatus*), and Belkin's dune tabanid fly (*Brennania belkini*). Surveys for these species have not occurred to date on the project site, and since the site is disturbed from its natural state, it is unlikely that these species are currently present within the proposed road removal project site. Therefore, they are not likely to be affected by the project.

As stated above, no vernal pool or salt marsh habitat types are present onsite, and as a result the species that rely on these habitat types are not expected to occur within the project footprint. The evaluation of special status species occurrences onsite was based on a habitat suitability type analysis coupled with on the ground observations. The investigation did not include definitive surveys to determine the presence or absence of each species, but did include direct observation of onsite and offsite conditions and review of biological reports and the CNDDB records documenting recorded occurrence data from the area to conclude whether or not a particular species could be expected to occur.

4.0 IMPACT ASSESSMENT AND PROPOSED MITIGATION MEASURES

The project as proposed would impact existing roads, as well as some areas of sand substrate on road shoulders and the disturbed areas associated with past development of

the site. For the impact assessment, the engineered drawings were overlaid onto the habitat map, and habitat impacted was calculated using Arc-GIS 10. Please refer to Figure 6 – Habitat Impact Map for further detail. Construction activities are estimated to impact approximately 6.31 acres of existing developed and ruderal areas of the site associated with the removal of roads, sidewalks, curbs/gutters, retaining walls, and other infrastructure. Approximately 3.87 acres of this total is directly associated with road removal. The remaining area is primarily associated with the removal of non-native plants. Based on a worst case scenario, it is estimated that approximately 0.46 acre of Dune Lupine Scrub will be affected by earthwork associated with the project. The disturbance areas will provide creation, restoration and enhancement opportunities for southern coastal dune habitat (primarily Southern Dune Scrub with elements of Southern Foredune) to increase coastal dune habitat functions and values onsite.

As shown on the Habitat Impact Map, the project is focused on developed areas with a small amount of annual grassland habitat temporarily affected during the project. Additionally, small areas mapped as Dune Lupine Scrub may also be affected during construction activities. While the goal will be to limit encroachment into these areas, some disturbance to Dune Lupine Scrub may be required to complete the project. As a result, without incorporation of preconstruction surveys, the project could affect Lewis' evening primrose, silvery legless lizard, and coast horned lizard that may be present in close proximity to the work area. Because the project may start in the late summer months, nesting birds could be present. It is also possible that bats could be using onsite trees proposed for removal. The following measures are proposed to reduce project related impacts to biological resources onsite:

1. Preconstruction Biological Surveys. Grading, earthwork and removal of non-native vegetation onsite could result in impacts to special status plants and wildlife such as Lewis' evening primrose, legless lizard, horned lizard, nesting birds and bats. Spring and summer botanical surveys will occur in 2013 to map the extent of Lewis' evening primrose occurrences within the work area. An approximate 50-foot buffer around the work areas shall be included. This preconstruction survey effort will document whether or not the project will impact the species, as well as allow sufficient time to collect seed from any occurrences within the disturbance footprint. The results of the surveys will be provided in a preconstruction survey report.

Within two (2) weeks prior to construction, the restoration ecologist/biological monitor working with LAWA staff shall conduct preconstruction surveys of the work area to make sure wildlife, both common and special status, are not present within the work area. An additional survey of the work area shall occur on the first day of construction to ensure special status animals are not in harm's way. If legless lizards or horned lizards are present within the disturbance footprint, they shall be captured and relocated outside of the work area at a sufficient distance to preclude the animal from moving back into the work area. Cover boards have been strategically placed throughout the project site to help with the capture and relocation of reptiles such as the legless lizard.

Although the project has been timed to avoid the nesting bird season, it is possible that construction activities may occur between March 1 and August 31, which is identified as the bird nesting season. To minimize impacts to nesting bird species, including special status species and species protected by the Migratory Bird Treaty Act, as well as bat species identified as species of concern, all initial site disturbance shall be limited to the time period

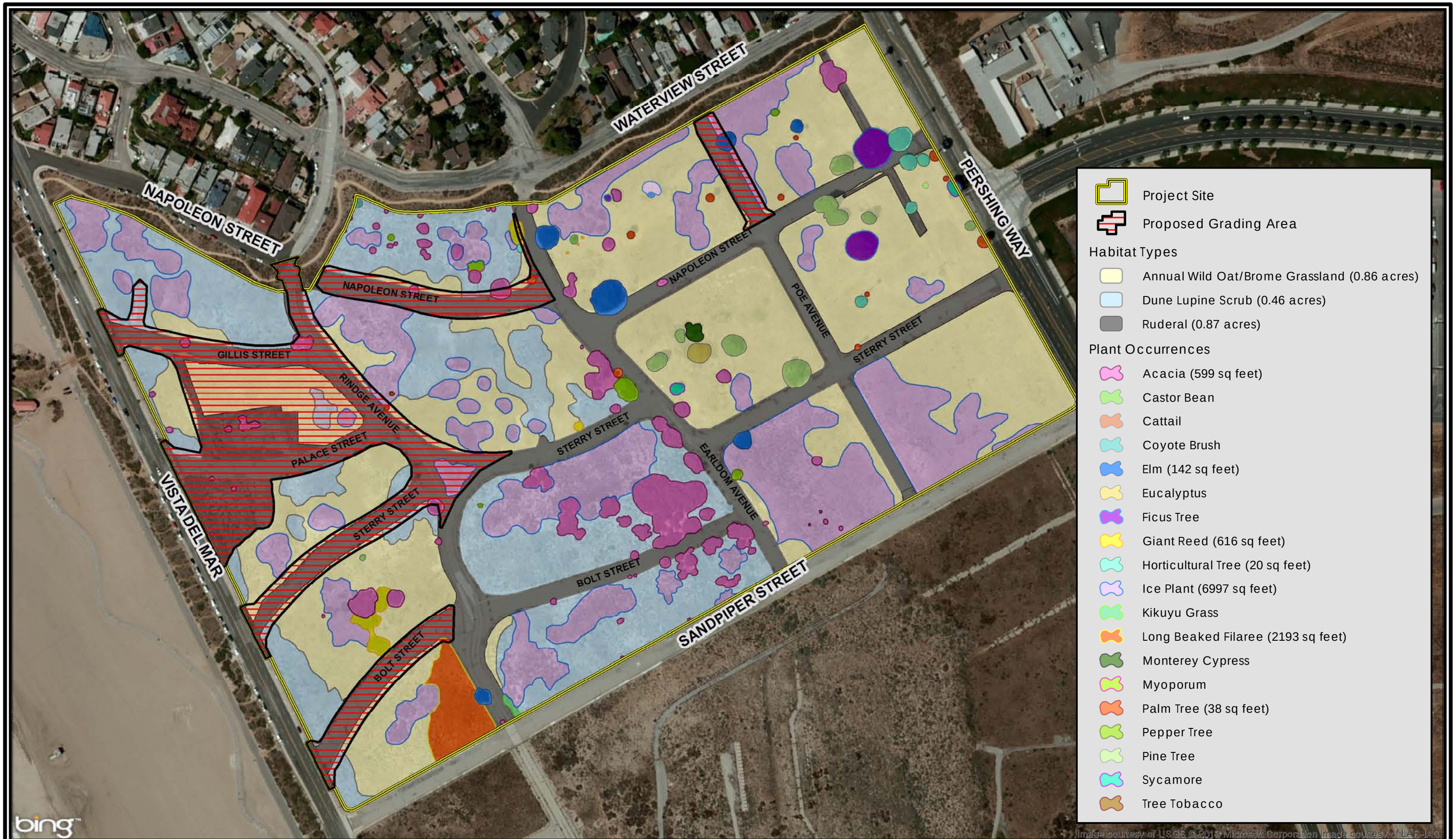

sage institute
KMA
Kevin Merk Associates, LLC

map updated
March 2013

200 100 0 200 Feet
30 15 0 30 Meters
1 inch = 200 feet

Coastal Dunes Improvement Project

Los Angeles World Airport

Figure 6

HABITAT IMPACT MAP

between September 1 and November 1 if feasible. Should construction be planned to start between March 1 and August 31, nesting bird surveys shall be conducted by the restoration ecologist/biological monitor to ensure nesting birds are not affected by construction activities associated with the project.

Should an active nest be identified, a buffer shall be developed to avoid adversely affecting the species until such time it has been determined by the biological monitor that the young have left the nest and are no longer reliant on it. For common passerine or shorebird species, a minimum 50-foot buffer shall be established and the biological monitor will be required to monitor the nest site during construction to make sure the nesting birds are not affected by construction. For raptors, a larger buffer of up to 200 feet may be required. A red-tailed hawk nest was identified onsite, but just outside the work area, and this site will be inspected prior to construction to make sure any offspring are no longer reliant on the nest site. Furthermore, burrowing owls have been observed in the El Segundo Dunes and preconstruction surveys will make sure burrowing owls are not present within the work area prior to the start of construction. Ultimately any nesting bird or burrowing owl overwintering buffer will be field fit to provide maximum protection until the birds are no longer reliant on the nest site.

Visual surveys for bats should be conducted in the vicinity of all trees that have cavities, broken limbs resulting in hanging woody debris, and large patches of loose bark that are within 100 feet of the proposed grading footprint. If bat roosts are found in trees that require trimming or removal, bat exclusionary measures (such as netting placed over cavities) shall be used to prevent bats from returning to the roost until the tree can be trimmed or removed. A biologist shall monitor any tree trimming or removal activities in case a bat is injured. If required, trees shall be trimmed gradually to allow bats potentially using these trees for roost sites time to leave the area unharmed. Arrangements shall also be made with a veterinarian specializing in wildlife rehabilitation to care for any wildlife injured as a result of project construction.

2. Preconstruction ESHA Delineation. The project's road and infrastructure removal activities are within close proximity to Dune Lupine Scrub, which is an ESHA. Work activities could result in direct or indirect disturbances to Dune Lupine Scrub habitat type. To avoid and minimize impacts to Dune Lupine Scrub, the restoration ecologist will work with LAWA and the Contractor to delineate the extent of potential ESHA within the project boundaries for avoidance. The edge of intact native dune scrub habitat will be marked in the field, and staking, flagging and/or orange construction fencing shall be installed to protect the resource during road removal. Fencing shall be field fit to avoid and minimize impacts to onsite native habitat or plant assemblages to be retained. Project maps and construction documents will be used to map areas of Dune Lupine Scrub impacted during construction, and submitted with the final project report.

3. Environmental Awareness Training. To avoid and minimize impacts to ESHA and special status species within the project site, the project restoration ecologist/biological monitor in concert with LAWA staff shall provide environmental awareness training to all involved personnel. The training shall at a minimum include an overview of the project, special status biological resources present or potentially present onsite, and general provisions and protection measures to be implemented during construction. All construction personnel

shall sign an affidavit confirming they have received the training and shall receive a hard hat sticker.

4. Construction Monitoring. During construction, the restoration ecologist/biological monitor will help LAWA oversee activities during the road removal project. The goal of the construction monitoring program will be to help avoid and minimize impacts to special status biological resources including ESHA and document compliance with the project's Coastal Development Permit. It is anticipated that monitoring activities will be intensive at the start of construction while crews are removing roads and non-native plant occurrences within the work area. Once the extent of ESHA within the work area has been delineated, and all vegetation disturbance has been completed, the monitoring schedule will be reduced as deemed appropriate by the restoration ecologist/biological monitor and LAWA.

5.0 ECOLOGICAL LANDSCAPE PLANTING PLAN

Coastal dunes are highly dynamic sand deposits located landward of beaches. Dunes typically supply sand to beaches during erosive storm events and act as buffers to wave energy. Given the separation of the LAX/El Segundo Dunes from the coastal strand along the immediate shoreline coupled with the on-going grooming and management of sand on Dockweiler State Beach, the movement and management of sand appears to be a less critical component of the subject project. Nonetheless, the proposed improvement project will manage and stabilize bare sand in the grading footprint, and attempt to create areas of southern foredunes supporting dune-stabilizing species, and enhance the existing dune structure onsite.

Sand stabilization and landscaping activities will commence immediately following removal of roads, hardscapes, and non-native plants onsite. As stated above, dune sands adjacent to road removal areas will be placed over the removed roadways and contoured to look as natural as possible. The sands will then be stabilized with straw wattles or fiber rolls and seeded with locally-collected native plant material. The straw wattles will be used to break the slope into manageable units to slow surface runoff, collect sand and provide seedlings a protected environment to become established. Limbs and trunks of non-native trees and shrubs removed from the site may also be used as appropriate to demarcate dirt/DG service access paths that will remain following street removal, create seedling establishment areas and provide shelter for reptiles and other native animals onsite.

5.1 Landscape Planting Plan Overview

Ecological landscaping activities will commence in the spring and summer 2013 with the start of the non-native plant abatement program and initial seed collection effort. The second phase of the project will include removal of roads and infrastructure as well as non-native species from the site. The Ecological Landscape Plan will utilize coastal dune scrub species in the western portion of the site, and transition to coastal prairie and grassland species in the east. Please refer to Figure 7 for the Planting Plan Overview Map. The disturbed areas will be hydroseeded using seeds collected from donor sites within the El Segundo Dunes. Broadcast seeding methods will be employed where hydroseeding does not provide sufficient cover or areas of poor germination are experienced. Long-term implementation of this Plan will include continued weed abatement and future seed collection efforts to provide plant material for nursery propagation, and development of container stock for outplanting during the five year program.

KMA
Kevin Merk Associates, LLC

map updated
March 2013

200 100 0 200 Feet
30 15 0 30 Meters
1 inch = 200 feet

Coastal Dunes Improvement Project

Los Angeles World Airport

Figure 7

PLANTING PLAN OVERVIEW MAP

Because the seed collection effort is commencing in the spring of 2013 and the amount of seed to be collected during the first year is unknown at this time, initial seed application rates following road removal may vary. The goal will be to provide the contractor with approximately 10 to 15 pounds of seed per acre of disturbance for application post construction. Assuming initial road and non-native species removal will affect roughly six (6) acres, 60 pounds of seed will be required to meet the 10 pounds per acre application rate. Should seed collection efforts be unable to provide the 60 pounds of seed, the hydroseed application will rely on mulch and tackifier to meet initial erosion control requirements while additional seed collection is undertaken. If seed collection in 2013 results in more seed availability, higher seeding rates may be used as determined appropriate by the project's restoration ecologist.

All graded areas will be hydroseeded and/or broadcast seeded by hand (or belly seeder) with the native seed mix included under the Planting Specifications below. Seedling recruitment islands will be assembled in desirable areas identified based on a comparison to the reference site as having similar geomorphology, aspect, degree of disturbance and resistance to invasive weeds. Natural materials found on site (i.e. leaf litter, soil with active microbial and mycorrhizal content, fallen logs) will be used to create and inoculate the islands, and nursery stock when available will be installed in these islands to emulate clusters of intact dune vegetation. Detailed as-built planting plans will be prepared at the completion of all landscaping activities onsite to track Plan implementation and the success of the program.

Even though the restoration effort is expected to create self-sustaining native plant assemblages that will not require irrigation once established, the initially seeded areas will receive irrigation during the first year establishment period. Seeding activities are expected to commence in the late fall and early winter in order to maximize the potential for successful establishment with the onset of the rainy season. A temporary irrigation system will be in place, however, to ensure seeded plant material survives prolonged dry periods during the winter months, which can be expected in Southern California. The watering cycle will emulate the winter rain season, and be tapered off in the summer. It is expected that the irrigation system will be discontinued at the end of the first year unless there is a need for reseeding or planting areas of high mortality.

5.2 Propagule Source

Seed collection efforts will occur within the El Segundo Dunes complex to provide plant material for this project. Field reconnaissance has identified areas of suitable donor plants onsite and south of the project area to be used for initial seed collection in the spring and summer 2013. Seeds collected onsite will be used for all seeding efforts, both hydroseed and broadcast seed applications. All seed collected shall be cleaned, dried and stored by LAWA until it is ready to be applied onsite.

Additional seed will be collected from the vicinity of the project site for propagation in the onsite nursery. Plant material shall be grown in-situ and in varying container sizes as available such as: super stubby; super cell; tree band; deep one-gallon; regular one-gallon; 5-gallon; 15-gallon or larger depending on the species. The quality of the plant material shall be inspected and approved by the project restoration biologist and LAWA Environmental Division staff prior to installation onsite. Collection and installation of any

live plant material salvaged from other areas of the dunes may also be possible and would likely occur during the winter months when the plant material is not at risk from desiccation.

For coastal prairie/grassland habitat restoration on Poe Avenue in the eastern part of the site, LAWA will work with nearby (i.e.: Santa Monica Bay area) habitat restoration managers to acquire needlegrass seed and young nursery grown plants suitable for introduction to the site. As feasible, seed will be collected from small needlegrass occurrences observed in the El Segundo Blue Butterfly Habitat Preserve south of the site and directly sown onto the site or propagated in the nursery for outplanting.

5.3 Site Preparation

Sand stabilization and restoration activities will commence immediately following removal of roads and hardscapes onsite. As stated above, dune sands will be placed over the removed roadways and contoured to resemble a natural looking dune system. The sands will then be stabilized with straw wattles or fiber rolls, and seeded with native plant material typical of the southern coastal dune habitat type (i.e., elements of southern foredunes and dune scrub). The straw wattles will be used to break the slope into manageable units to slow surface runoff, collect sand and provide seedlings a protected environment to become established. Limbs and trunks of non-native trees and shrubs removed from the site may also be used as appropriate to demarcate dirt/DG service access paths that will remain following street removal, create seedling establishment areas and provide shelter for reptiles and other native animals onsite.

5.4 Plant Material Installation

Following site preparation activities, the disturbance area will be seeded with the mixture listed in Section 5.5 below via hydroseeding. If any areas of the site are not adequately covered during the hydroseeding effort or a seeded area has poor germination, broadcast seeding by hand or with the use of a belly seeder (aka belly grinder) shall occur to fill in the "gaps". The proposed seeding effort represents the initial effort to recreate the coastal dune habitats within the project site. The Contractor will be responsible to incorporate custom-collected seed provided by LAWA into the hydroseed slurry using the project specific technical specifications. Once container stock is available following propagation in the onsite nursery, direct planting in the restoration area will also be possible.

5.5 Seeding and Planting Specifications

Planting activities involve the placement of appropriate native plants in locations identified on project construction documents and by the LAWA team in the field for optimal development based on edaphic factors, slope aspect and exposure. Installation of seed and plants will occur in the late fall to early winter, depending on seasonal environmental conditions in order to maximize the potential for successful establishment with the onset of the rainy season. Plant installation is planned to occur once the top six (6) inches of sands are moist. Nursery stock shall be installed irregularly and in clusters throughout the restoration area to emulate natural coastal dune ecosystems. A temporary irrigation system will also be installed in order to encourage the successful establishment of planted materials.

5.5.1 Seed Application

Application of seed will occur throughout the temporarily disturbed areas of the site by hydroseed, hand or by using a seed spreader. If needed during future seeding activities, a weed free mulch or rice straw may be applied on top of the seed application at approximately 1,000 pounds per acre, which equates to an approximate two inch layer to be crimped into the sand to ensure sufficient sand contact so that the material doesn't blow away. As previously stated, areas to be seeded shall be graded to blend into the surrounding topography, then fiber rolls installed and hydroseeded.

The hydroseed areas shall be separated into the Southern Foredune element and the Coastal Prairie element. The hydroseed shall consist of the following: Conwed 1000 wood fiber mulch shall be applied at a rate of 2000 pounds per acre. Ecology Controls M-Binder/Tack shall be applied at a rate of 200 pounds per acre. Fertilizer shall be applied at a reduced rate of 100 pounds per acre using Biosol Mix (7-2-3) organic fertilizer. AM 120 Mycorrizal inoculum shall be added at 60 pounds per acre. Dune areas with native vegetation within the project area shall be flagged or demarcated in the field by the restoration ecologist/biological monitor and LAWA to be avoided with the hydroseeding slurry.

Hydroseed may be applied over fiber rolls, but shall not be applied to dead or dried iceplant mats or other dead plant material unless decomposition has sufficiently occurred as determined by the restoration ecologist/biological monitor to allow adequate soil contact by the hydroseed slurry.

Broadcast seeding shall occur following completion of all earthwork, erosion control installation and application of hydroseed. This is anticipated to be in late October, November or December. Broadcast seeding shall be performed should the hydroseed application not be able to provide adequate cover to all bare, loose sand areas within the project footprint. Seed provided by LAWA shall be spread by hand or by use of a belly seeder onto the sand in areas where hydroseed application failed to provide adequate cover. The broadcast seed shall be raked in lightly to provide a light (approximately 1 inch or less) cover. Rice straw or equivalent weed free mulch may be used to cover the seed if raking proves ineffective. If deemed appropriate, broadcast seed application may be allowed to occur prior to hydroseed application, but will be at the discretion of LAWA.

Table 1. Coastal Dunes Improvement Project Coastal Dune Scrub Seed Mix

Scientific Name	Common Name	Approx. Quantity (LBS/Acre)
Abronia maritima	sand verbena	1.00
Abronia umbellata	pink sand verbena	1.00
Ambrosia chamissonis	beach bur	1.00
Calystegia soldanella	dune morning glory	0.50
Camissonia chieranthifolia	dune primrose	1.00
Croton californicus	croton	0.50
Distichlis spicata	salt grass	0.50
Encelia californica	California encelia	0.50
Ericameria erichoides	mock heather	1.00
Isocoma menziesii var. *vernonoides*	coast goldenbush	1.00
Isomeris arboreus	bladder pod	1.00
Corethrogyne filaginifolia	common corethrogyne	0.50
Lotus scoparius	deer weed	0.25
Lupinus chamissonis	silver bush lupine	0.25
	TOTAL	**10.00**

Table 2. Coastal Dunes Improvement Project Coastal Prairie/Grassland Seed Mix

Scientific Name	Common Name	Approx. Quantity (LBS/Acre)
Nassella cernua	Nodding needlegrass	3.00
Bromus carinatus var. *maritimus*	Seaside brome	3.00
Vulpia microstachys	Six weeks fescue	3.00
Distichlis spicata	salt grass	1.00
	TOTAL	**10.00**

5.5.2 Container Stock Installation Methods

As previously stated, local genetic material will be used for all planting activities. Seed and propagule collection from approved collection sites within the El Segundo Dunes will occur in the future to propagate and develop nursery stock.

If seeded material is providing consistent cover in specified areas, nursery stock shall be positioned accordingly not to affect the young seedlings. Container stock shall be installed

in appropriate holes as determined by container size. For instance, a one gallon container plant will require an approximate 10-12-inch diameter hole to be excavated to a depth of about 12 inches. All holes will be excavated by hand using a shovel, pick, or other equipment approved by the LAWA team in concert with the restoration ecologist.

Once the specimen is installed, the remainder of the hole will then be backfilled with native soil firmly tamped down. A water well will be formed around each planting to focus supplemental irrigation toward the root system. The water well should extend out approximately six inches from the root ball, but will be dependent on the size of the container. A low nitrogen, time-released, Pelletized Osmocote™ or another approved equal fertilizer shall be evenly distributed in the water well, around the root ball, within the top two to four inches of sand.

Spacing of container stock shall be determined based on the professional judgment of the restoration ecologist and will consider slope, exposure, and other factors such as the establishing seeded material. Container plant installation will strive to maintain an estimated three to five foot on-center planting mosaic for shrubs. Weed-free mulch shall be applied around each container plant following installation. Mulching container stock may also be allowed on an annual basis throughout the monitoring period to promote successful establishment of the coastal dune habitat.

5.6 Fertilization

The hydroseed slurry shall have a low nitrogen organic fertilizer added as required in the technical specifications. Fertilizer shall be applied at a reduced rate of 100 pounds per acre using Biosol Mix (7-2-3) organic fertilizer. AM 120 Mycorrizal inoculum shall be added at 60 pounds per acre.

For container stock, a single application of fertilizer shall take place concurrently with the installation of the nursery grown material in the restoration area. No subsequent fertilizer applications will be needed. Pelletized Osmocote™ (14-14-14) or another approved slow-release pelletized fertilizer may be used, as indicated in the planting specifications.

5.7 Herbivore Protection

No protective fencing for individual plants will be required in the project area at this time. Much of the area surrounding the site is urbanized and does not support large herbivore populations that could ultimately affect the newly installed plant material. However, it is possible that small mammals such as rabbits (lagomorphs), pocket gophers, and ground squirrels (*Spermophilus beecheyi*) could become a problem. If browse damage or other signs of herbivory are observed in the restoration area during the regular monitoring visits, then those plants that are experiencing the most damage shall be individually caged, or have some sort of herbivore protection installed.

5.8 Remedial Seeding and Planting

If poor seed germination is experienced in the grading and hardscape removal area, remedial seeding and planting shall be undertaken to provide consistent vegetation cover in the landscape treatment areas. In the future when container stock is available, if more than 25% of the planted container stock dies, remedial planting and/or seeding should occur to

achieve the required coverage of native coastal dune habitat as described in the success criteria below. Because a temporary irrigation system will be in place, remedial planting and/or seeding can take place at the start of the second growing season, depending on the extent of remediation necessary. If a natural event leads to the death of seeded or planted vegetation within the restoration area, contingency or adaptive management measures will be implemented to meet the final success criteria.

5.9 Erosion

Wind and rain erosion could affect the establishment of the natural dune topography and proposed native dune habitat. Hydroseed application using native seed, mulch and tackifier at the onset of the restoration effort will minimize the potential for erosion onsite, but a suite of other contingency measures will be in place for the restoration ecologist and LAWA Environmental Division to utilize to prevent erosion from becoming a problem with the restoration effort. If needed straw plugging and snow fencing will be employed in areas of high wind or rain erosion. Handfuls of rice straw approximately 18-24 inches long will be planted vertically in the sand spaced approximately six to twelve inches apart to stabilize any bare sand areas experiencing erosion. Snow fencing would be another tool to help manage sand and helping the young plants become established. As needed, sand fencing would be erected on the site perpendicular to the primary wind direction to promote additional sand accumulation and seed and plant establishment.

6.0 MAINTENANCE PROGRAM

6.1 Initial Care of Newly Vegetated Areas

Although the vegetation proposed for the restoration area is to be self-sustaining, its establishment and growth will be encouraged by regular maintenance, a non-native weed abatement program, supplemental watering and monthly monitoring visits during the first year.

Dunes are fragile coastal habitats that are subject to destruction from trampling and vehicular access. Access to the site following construction will be limited to select roadways, and defined trails. Existing airport support features such as an FAA equipment tower located near Waterview Street and Earldom Avenue will have an access trail defined to limit worker access into sensitive habitat. As part of the ongoing education program, maintenance crews and other personnel will be reminded of the sensitive habitat and importance of minimizing foot and vehicular traffic into treatment areas. However, maintenance vehicles used for mowing and disking will be permitted in annual grassland areas in the eastern portion of the site as part of the regular site management activities necessary for airport operational safety.

6.2 Non-Native Weed Abatement Program

While visiting the restoration area during the first year's monitoring activities, personnel shall inspect the irrigation system to ensure proper function and examine the restoration area for the presence of undesirable plant species. Control of invasive plant species shall be conducted, as necessary, to encourage the development and establishment of the proposed vegetation. Seasonally-timed weeding shall be done by hand or mechanically, as appropriate, during the five year monitoring period or until it is determined that the

installed plantings are not at risk from competition and exclusion by non-native plants. The LAWA Maintenance Division will focus on the invasive non-native plant occurrences shown on Figure 3, the Habitat Map, and Figure 8, the Non-Native Plant Occurrence Map. Please note that some of the trees will be left in place and managed accordingly to promote beneficial wildlife habitat. Maintenance Division staff will continue with the maintenance and weed abatement programs as needed to care for the coastal dune and grassland habitats. Maintenance crews and others involved with the non-native weed abatement program shall be given non-native species identification and restoration ecology training to ensure the program is implemented by qualified individuals familiar with native plants and general habitat restoration techniques.

Annual weed control activities shall primarily be conducted during the spring and early summer prior to development of mature seeds in non-native species. Weed control may be conducted during the fall and winter months where possible in order to avoid disturbing nesting birds. Non-native species removal shall be managed by the project restoration ecologist in concert with LAWA Environmental Division staff, and conducted by individuals familiar with native plants and habitat restoration techniques. Techniques developed by Bossard et al. (2000) shall be utilized as feasible to eradicate and control non-native plants on the project site.

Limited applications of a glyphosate-based herbicide such as Round-up™ may be allowed to control invasive species as long as it has an organic or non-toxic non-petroleum-based carrier agent. Iceplant (*Carpobrotus* spp.), spurge (*Chamaesyce* sp.), and giant reed (*Arundo donax*) are several species occurring within the restoration area that may require herbicide treatment where hand removal is not feasible or cost effective. Prior to application of any chemicals, the application area shall be searched for native plants and animals to ensure they will not be affected by the spraying. Spot spraying and brushing will be the primary application technique. Spot spraying is conducted with a backpack sprayer and targets distinct occurrences of weeds. Other techniques such as wicking may be used at the discretion of LAWA. Wicking uses an absorbent applicator that may be brushed over the target weed surface. Herbicide shall be applied by a qualified herbicide applicator under the direction of the project restoration biologist, and herbicide applications shall follow manufacturer's guidelines and City of Los Angeles requirements.

6.3 Irrigation

Maintenance of soil moisture in the root zone is critical to the establishment of the coastal dune scrub and grassland habitats in the restoration areas, especially during the first year. The restoration areas will receive regular irrigation during the one-year establishment period. Water will be supplied from irrigation lines along the perimeter of the site, using overhead spray heads to mimic the rain season. The temporary irrigation lines may be run from existing fire hydrants in the area or through the use of a water truck positioned on adjacent roads to gravity feed the system. The watering cycle will be tapered off in the summer months to promote establishment of the dune plant community. The goal of the restoration program is to have the irrigation system discontinued after the first year depending upon environmental conditions as well as the potential need for replanting areas of high mortality.

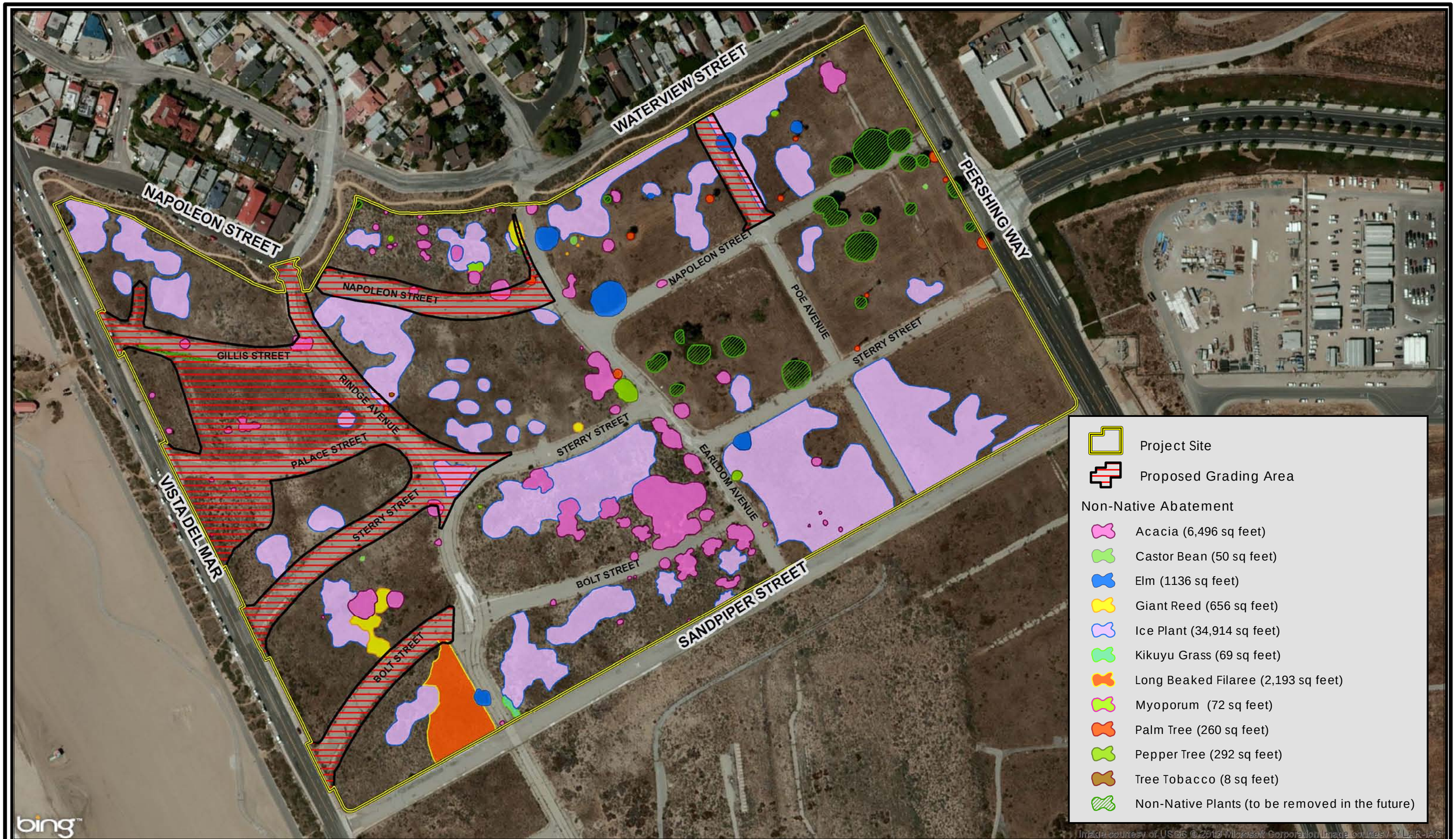

sage institute

KMA
Kevin Merk Associates, LLC

map updated
March 2013

200 100 0 200 Feet
30 15 0 30 Meters
1 inch = 200 feet

Coastal Dunes Improvement Project

Los Angeles World Airport

Figure 8

NON-NATIVE PLANT
ABATEMENT MAP

7.0 SUCCESS CRITERIA AND MONITORING PROGRAM

7.1 Final Success Criteria

The requirement of this restoration program is to provide a stabilized coastal dune system vegetated with plants characteristic of the Southern Foredunes and Southern Dune Scrub as well as Coastal Prairie habitat described by Robert F. Holland (1986).

The goal for the restoration areas will be to have approximately 50% relative areal cover of native dune and grassland habitat by the end of the fifth monitoring year. The goal for non-native weed occurrences will be less then 30% relative areal cover by the end of the five-year monitoring period. Areas of bare sand are typical of coastal dune habitats, and it is estimated that approximately 20% cover of bare sands may be present within the restoration areas.

Table 3. Annual Performance Standards

Performance Standards	Year 1	Year 2	Year 3	Year 4	Year 5
Percent Relative Areal Cover of Non-Native Grasses and Forbs	<70%	<60%	<50%	<40%	<30%
Percent Relative Areal Cover of Native Species in Hydroseed Areas	>30%	>40%	>45%	>50%	>50%

7.2 Monitoring Program

The restoration ecologist will oversee the initial implementation of the weed abatement and native plant landscaping program, and train LAWA staff or designees to maintain and monitor the site. As-built planting plans will be prepared immediately following the grading and seed installation activities. The project site will be monitored by LAWA. Monitoring will take place from a landscaping maintenance perspective and observations and records will be in the form of maintenance logs.

To the extent possible, the seeded plant material introduced to the site will be monitored based on the extent of aerial cover compared to the total treatment area as delineated on the as-built planting plans. Permanent line transects based on GPS coordinates will be established to assess aerial cover from the same location as needed. It is expected that over time, seeded areas will grow together and individual specimens may be difficult to track in the monitoring program, therefore, the overall goal of the program is to provide a dominant cover of native dune species. Additionally, the functioning of dune stabilization techniques and any wind erosion, and foot traffic patterns will also be assessed and documented during regular maintenance and monitoring visits. Observations of wildlife use of the site, herbivory/browse damage, vandalism, vehicle damage, along with a review of the year's weather will also be included.

As-built planting plans will be prepared by the restoration biologist immediately following the initial seeding effort in order to track the success of the plantings over the monitoring period. The as-built plans will show the location of all hydroseeded and broadcast seeded areas. Transect locations that will be used during the monitoring program shall also be

shown. Once container stock outplanting or additional seeding occurs, the as-built plans will be updated to identify each planting/seeding area.

The road removal restoration areas will be monitored on an annual basis by qualified individuals familiar with habitat restoration. The monitoring program will extend for a period of five years following implementation. Monitoring will occur on a monthly basis for the first year following plant installation. Monitoring visits will be reduced as determined appropriate by the project team. Following the first year's activities, monitoring will be conducted in the late spring to early summer of each year. Plant cover will be measured along established transects using methods described by Bonham (1995).

Monitoring logs will be used by LAWA in its adaptive management of the site. Annual monitoring logs will be prepared to support the final project report to be prepared for Coastal Commission following the fifth monitoring year. If target goals are not achieved at the end of the five-year monitoring period, additional plantings or other contingency measures may be recommended. Any contingency measures implemented will be documented in annual monitoring logs and the appropriate resource agencies will be notified as necessary.

7.3 First Year Monitoring Activities

The most important activity after the installation of plant material is the monitoring of the planted and seeded vegetation. Monthly monitoring visits will be conducted by LAWA staff to compare plant growth and other characteristics in the restoration area to existing natural habitat areas further west of the project site (i.e., reference sites) and in the immediate vicinity to determine "normal conditions" through the growing season. All installed plant material and the irrigation system will be inspected regularly to ensure a successful restoration program. Less than 30% relative areal cover by native vegetation shall require remedial seeding/planting to meet the final success criteria, as well as prevent undesirable plant species from outcompeting native vegetation onsite. The restoration team shall identify bare areas that could feasibly support dune vegetation, and shall formulate an appropriate replacement plant palette including numbers necessary to remedy the situation.

Another important monitoring activity is to detect the presence and advance of invasive plant species such as introduced species commonly found on disturbed areas onsite. Non-native grass and forb species adapted to bare soils and harsh growing conditions could potentially take over the restoration area if left unchecked. Monitoring activities will determine the presence of such species and if remedial action is required to control their advance.

The frequency of the monitoring activities can be reduced to less than monthly during the first year if it is determined by the restoration team that habitat development is progressing without serious problems. However, seeded areas and future container stock health and vigor will need to be monitored monthly during the first dry season to ensure that the establishing plants receive sufficient irrigation.

7.4 Wildlife

All wildlife observed in and around the restoration area will be documented as to species, number and functional use of habitat (i.e.: feeding, nesting, roosting, etc.). Observations of the general habitat quality, species diversity, richness and composition will also be documented during the regular site inspections.

7.5 Natural Recruitment of Native Plant Species

Natural recruitment of native plant species will be promoted as part of the restoration efforts, and monitored at a reconnaissance-level, and those dominant species observed colonizing the site will be qualitatively described. The desirable target species in the restoration area include those species identified in Table 2, in addition to other species characteristic of native southern dune scrub habitat.

7.6 Use of Reference Sites

Suitable reference sites (or ecosystems of reference) have been identified in the El Segundo Blue Butterfly Habitat Preserve further south of the subject site on LAX property. The reference sites will be utilized by monitoring personnel to gauge plant phenology and other ecological trends experienced during the monitoring season to aid in conclusions made while analyzing monitoring data, determining if the goals and objectives of the program are being met, and whether additional treatments or changes in management strategies on the site are required.

7.7 Photo Documentation

Permanent photo points will be established throughout the restoration area to assist in tracking the success of the dune stabilization and landscaping program. Permanent photo points will be established during the preparation of the as-built planting plan and the line transects to be used during the monitoring program. Ground view photos will be taken during each monitoring year from the same vantage point to evaluate the success of the restored habitat. Photo points will be established along each transect, and include photos taken from the beginning and end points of the transect.

7.8 Reporting

LAWA will summarize monitoring data annually, and use the data to guide management of the project site and any remedial or corrective measures that must be taken to meet the five-year success criteria. A final botanical survey report prepared by a qualified botanist with experience in coastal ecosystems shall be submitted to the Coastal Commission after the fifth implementation year. The report shall include an evaluation of the progress of the restoration effort in relation to the final success criteria. If at the end of the fifth year monitoring activities, it appears that vegetation in the restoration area will not meet the overall success criteria at the end of the five-year monitoring period, appropriate remedial activities will be recommended to meet the final success criteria. The monitoring report shall include monitoring methodology, results, a discussion of the results and any pertinent recommendations that will assist in meeting overall performance criteria.

7.9 Inspections of the Landscaping Area

After the initial five-year implementation period is completed, as well as during the first growing season (February-June), the restoration area may be inspected by any resource agency that desires to evaluate the success of the restoration program. The inspection will determine if the seeded vegetation is acceptable (approximately 30% relative areal cover of native vegetation thereafter) or if remedial seeding and/or planting is required.

8.0 COMPLETION OF ECOLOGICAL LANDSCAPING REQUIREMENTS

8.1 Notification of Completion

The botanical survey report completed after the fifth implementation year shall evaluate the success of the restoration effort in achieving the final success criteria and overall goals of the restoration program. If the final performance criteria are met, a statement regarding completion of the restoration effort shall be included. The Coastal Commission will have ultimate authority to approve completion of the restoration effort.

8.2 Coastal Commission Confirmation

After notification of completion, a site visit(s) may be conducted by resource agency personnel, the project restoration biologist and representatives from LAWA and other interested federal, state and local regulating agencies to confirm the completion of the restoration effort.

9.0 CONTINGENCY MEASURES/ADAPTIVE MANAGEMENT

Annual performance criteria and annual maintenance activities shall be integrated to resolve any problems where development performance of the new coastal dune habitat does not achieve expected goals. Maintenance and remediation will include such activities as the following:

- Treating problem areas with seed and container plant mixtures specifically designed to overcome the identified problem;
- Identifying and controlling undesirable plant species;
- Regulating human (and wildlife, if necessary) access within the treatment area;
- Modifying the irrigation program; and
- Utilization of fiber rolls, straw plugging, snow fencing and other appropriate erosion controls to stabilize the dune sands and create native coastal dune scrub habitat.

Key elements of success in native landscaping and coastal dune ecosystem restoration and enhancement are the clear, technically sound objectives and the flexibility to deal with unforeseen problems or physical changes. These represent the foundation of an adaptive approach to ecosystem management. Comparison with appropriate reference sites further south in the LAX/El Segundo dune system will be used to evaluate and guide the program over time. Reference site selection is critical to the development of the monitoring program, and to project design. The reference site provides a target for the evaluation of project performance. Reference sites also provide a control, useful in evaluating the degree of natural ecosystem variation/fluctuation that may be experienced during the course of a native dunes improvement program.

If project goals are not achieved, additional seeding or other contingency measures developed as part of the final dunes improvement program's adaptive management strategy may be recommended. Any contingency measures implemented will be documented in the City's maintenance and monitoring logs for the site.

Regular weed management, and use of an adaptive management program will ensure successful establishment of the target native vegetation with the benefit of improvement of their associated habitat types (i.e., southern foredune dune scrub and coastal prairie).

10.0 FUNDING MECHANISM/RESPONSIBLE PARTY

All funding for planning, implementation, maintenance and monitoring of this Ecological Landscape Plan, and any identified contingency measure required to achieve the primary goal of restoring coastal dune habitat as part of the Coastal Dunes Improvement Project shall be the responsibility of the Los Angeles World Airports. LAWA shall be responsible for implementing and monitoring contingency measures indicated as necessary to achieve the project's final success criteria.

11.0 REFERENCES

Bonham, Charles D. 1989. *Measurements For Terrestrial Vegetation*. John Wiley and Sons, New York.

Bossard, Carla C., John M. Randall, and Marc C. Hoshovsky. 2000. *Invasive Plants of California's Wildlands*. University of California Press, Berkeley.

Calflora. 2012. Information on wild California plants for conservation, education, and appreciation. Berkeley, CA. Accessed via: http://www.calflora.org/.

California Department of Fish and Game. 2009. Protocols for Surveying and Evaluating Impacts to Special Status Native Plant Populations and Natural Communities. November 24, 2009.

California Department of Fish and Game. 2003. California Natural Diversity Database, Rarefind V. 3. Queried April and October 2012.

California Department of Fish and Game. 2012a. Special Animals. Biogeographic Data Branch, California Natural Diversity Database. March 2012.

California Department of Fish and Game. 2012b. Special Vascular Plants, Bryophytes, and Lichens List. Biogeographic Data Branch, California Natural Diversity Database. April 2012.

California Native Plant Society. 2001. Inventory of Rare and Endangered Plants. V.7-08c-Interim 8-22-02. Updated online and accessed via: http://cnps.web.aplus.net/cgi-bin/inv/inventory.cgi.

Daubenmire, R.F. 1968. Plant *Communities: A Textbook of Plant Synecology*. Harper and Row, New York.

Holland, R.F. 1986. Preliminary Descriptions of the Terrestrial Natural Communities of California. California Department of Fish and Game, Sacramento.

Jennings, M. R., and M. P. Hayes. 1994. Amphibian and reptile species of special concern in California, 1 November 1994. California Department of Fish and Game, Inland Fisheries Division, Rancho Cordova, California. 255 pp.

Mattoni, Rudi. 1990. Species Diversity and Habitat Evaluation Across the El Segundo Sand Dunes at LAX. Prepared for the Board of Airport Commissioners, One World Way West, Los Angeles, CA.

Mattoni, Rudi. 1993. Natural and Restorable Fragments of the Former El Segundo Sand Dunes Ecosystem. Interface Between Ecology and Land Development In California – Edited by J.E. Keeley. Southern California Academy of Sciences, Los Angeles.

Natural Resources Conservation Service. 2012. Web Soil Survey. National Cooperative Soil Survey, U.S. Department of Agriculture. Accessed via: http://websoilsurvey.nrcs.usda.gov/app.

Sapphos Environmental, Inc. 2001. Biological Resources Memoranda for the Record on Floral and Faunal Surveys. Part of the Technical Report for the LAX Master Plan EIS/EIR.

Sawyer, J. O., T. Keeler-Wolf, and J.M. Evens. 2009. A Manual of California Vegetation, Second Edition. California Native Plant Society, Sacramento, CA.

United States Fish and Wildlife Service. 2000. Guidelines for Conducting and Reporting Botanical Inventories for Federally Listed, Proposed, and Candidate Plants. January 2000.

United States Fish and Wildlife Service. 2012. National Wetlands Inventory website. U.S. Department of the Interior, Washington, D.C. Accessed via: http://www.fws.gov/wetlands/.

Wallace Laboratories, LLC. 2011. LAX Coastal Dunes Improvements Agronomic Soil Suitable Evaluation Below Pavement. Letter to Gin Wong Associates regarding plantability of soils under roads to be removed

APPENDIX A

Coastal Dunes Improvement Project
Onsite Demolition and Grading Plans
Offsite Improvement Plans
(AECOM)

KMA

INDEX TO SHEETS

NO.	PLAN OF	FROM	TO
1.	COVER SHEET	--	--
2.	LEGEND, ABBREVIATIONS AND NOTES	--	--
3.	OVERALL SITE PLAN	--	--
4.	TYPICAL SECTIONS	--	--
5.	GRADING SECTIONS	--	--
6.	DEMOLITION PLAN (1 OF 3)	BOLT STREET	STERRY STREET
7.	DEMOLITION PLAN (2 OF 3)	PALACE STREET	GILLIS STREET
8.	DEMOLITION PLAN (3 OF 3)	NAPOLEON STREET	POPE AVENUE
9.	GRADING PLAN (1 OF 3)	BOLT STREET	STERRY STREET
10.	GRADING PLAN (2 OF 3)	PALACE STREET	GILLIS STREET
11.	GRADING PLAN (3 OF 3)	NAPOLEON STREET	POPE AVENUE
12.	IMPROVEMENT PLAN (1 OF 4)	GILLIS STREET	PALACE STREET
13.	IMPROVEMENT PLAN (2 OF 4)	PALACE STREET	STERRY STREET
14.	IMPROVEMENT PLAN (3 OF 4)	STERRY STREET	SANDPIPER STREET
15.	IMPROVEMENT PLAN (4 OF 4)	NAPOLEON STREET	RINDGE AVENUE
16.	DETAILS	--	--
17.	BMP DETAILS	--	--
18.	LADBS GRADING PRE-INSPECTION REPORT	--	--

PLAN
SCALE: 1"=200'

COASTAL DUNES IMPROVEMENT PROJECT
ONSITE DEMOLITION AND GRADING PLANS
OFFSITE IMPROVEMENT PLANS

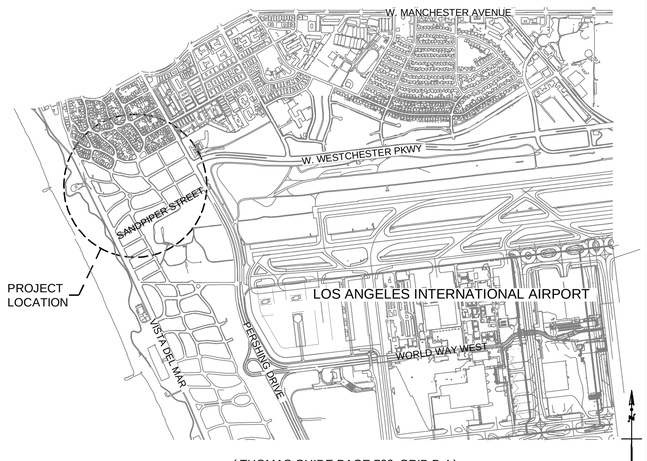

(THOMAS GUIDE PAGE 702, GRID B-4)

VICINITY MAP

NOT TO SCALE

IN CONNECTION WITH REVOCABLE PERMIT R-1185-0024: VISTA DEL MAR AT GILLIS STREET, PALACE STREET, STERRY STREET AND BOLT STREET.

B-PERMIT NUMER: BR402503

IN CONNECTION WITH LADBS PLAN CHECK NO. G12LA00046

LIST OF STANDARD PLANS

NO.	STD. PLAN	DESCRIPTION
1.	S-410-2	CURB AND GUTTER
2.	S-430-1	JOINTS IN CONCRETE PAVEMENT

THE CITY OF LOS ANGELES OR ITS OFFICERS OR AGENTS SHALL NOT BE RESPONSIBLE FOR THE ACCURACY OR COMPLETENESS OF ELECTRONIC COPIES OF THIS PLAN SHEET.

REVISION DATES: (DESIGN STAGE ONLY)

Sheet Version 4.01 2-2005

REFERENCES
DISTRICT MAP: WEST LOS ANGELES
DRAINAGE MAP: N/A
SUPERSEDES PLAN: N/A
R/W NO.: FIELD BOOK 093-149, 093-153
SEWER MAP: DL 487

BENCHMARKS	BASIS
DESCRIPTION	
BM 17-15125: WIRE SPIKE IN EAST CURB OF VISTA DEL MAR, 38.6' SOUTH OF CURB RETURN BC LOCATED SOUTH OF STERRY STREET	NGVD 29, 1985 ADJ.
BM 17-15135: WIRE SPIKE IN EAST CURB OF VISTA DEL MAR, 1.30' NORTH OF CURB RETURN BC LOCATED NORTH OF SANDPIPER STREET	NGVD 29, 1985 ADJ.

AECOM
DESIGN GROUP
ENGINEER: DONALD C. WEBER, PE
DESIGNED BY: DONALD C. WEBER, PE
DRAWN BY: DARCY SULZ
CHECKED BY: JOHN BEHZADI, PE
APPROVED BY: JOHN BEHZADI, PE

REGISTERED PROFESSIONAL ENGINEER DONALD C. WEBER No. C71238 Exp. 06-30-13 CIVIL STATE OF CALIFORNIA
02/05/2013

PLANS PREPARED BY:
AECOM
999 Town and Country Road
Orange CA 92868
Phone: 714.567.2501
Fax: 714.567.2441
www.aecom.com

ENGINEER /ARCHITECT SIGNATURE DATE

CITY OF LOS ANGELES DEPARTMENT OF PUBLIC WORKS BUREAU OF ENGINEERING

No.	REVISIONS:	DATE:	BY:
1	ADDED SHEET 18 TO INDEX		

WORK ACCEPTED

SERIAL NO.

APPROVALS:	DATE:	BY:
ST. TREES DIV.		
ST. LIGHTING		
D.O.T.		
SURVEY		

LA DPW ENGINEERING Building for Tomorrow Planning for Future

B - PERMITS
BR402503

INDEX NO.

GARY LEE MOORE, P.E. CITY ENGINEER

ACCEPTED BY:

PLAN CHECKER DATE

DIVISION / DISTRICT ENGINEER DATE

VERTICAL CONTROL: BM 17-15135, NGVD29, 1985 ADJ
HORIZONTAL CONTROL: NAD 83 STATE PLANE COORDINATES, ZONE V

SHEET TITLE: COVER SHEET

PROJECT: COASTAL DUNES IMPROVEMENT PROJECT

ADDRESS: 7600 BLOCK OF VISTA DEL MAR
PLAYA DEL REY, CA 90293

PROJECT NO.

DRAWING NO.
1

SHEET 1 OF 18 SHEETS

THE CITY OF LOS ANGELES OR ITS OFFICERS OR AGENTS SHALL NOT BE RESPONSIBLE FOR THE ACCURACY OR COMPLETENESS OF ELECTRONIC COPIES OF THIS PLAN SHEET.

ABBREVIATIONS:

AB	AGGREGATE BASE	MAN	MANUAL
ABND	ABANDONED	MAX	MAXIMUM
AC	ASPHALTIC CONCRETE	MED	MEDIUM
AGGR	AGGREGATE	MH	MANHOLE
BC	BEGIN CURVE	MIN	MINIMUM
BCR	BEGIN CURB RETURN	MISC	MISCELLANEOUS
BM	BENCH MARK	MON	MONUMENT
CB	CATCH BASIN	N	NORTH
CF	CURB FACE, CUBIC FOOT OR CUBIC FEET	NIC	NOT IN CONTRACT
℄	CENTER LINE	NTS	NOT TO SCALE
CLF	CHAIN LINK FENCE		
CONC	CONCRETE	OC	ON CENTER
CP	CONCRETE PIPE	OD	OUTSIDE DIAMETER
CY	CUBIC YARDS	OH	OVERHEAD
DET	DETAIL	PCC	POINT OF COMPOUND CURVE OR PORTLAND CEMENT CONCRETE
DIM	DIMENSION		
DIST	DISTANCE	PI	POINT OF INTERSECTION
DWG	DRAWING	PIVC	POINT OF INTERSECTION VERTICAL CURVE
		POC	POINT ON CURVE OR POINT OF CONNECTION
EA	EACH	PP	POWER POLE
EC	END OF CURVE	PRC	POINT OF REVERSE CURVE
ECR	END CURB RETURN	PT	POINT OF TANGENCY
EG	EXISTING GROUND		
EL	ELEVATION	R	RADIUS
EP	EDGE OF PAVEMENT	RCP	REINFORCED CONCRETE PIPE
EXIST	EXISTING	REQD	REQUIRED
		R/W	RIGHT OF WAY
FG	FINISHED GRADE		
FH	FIRE HYDRANT	SD	STORM DRAIN
FL	FLOW LINE	SDMH	STORM DRAIN MANHOLE
FT	FOOT OR FEET	SF	SQUARE FEET
		SHT	SHEET
G	GAS	SMH	SEWER MANHOLE OR SIGNAL MANHOLE
GB	GRADE BREAK	STA	STATION
GR	GRADE	STD	STANDARD
HORIZ	HORIZONTAL	T	TANGENT, TELEPHONE, TOP OR THICKNESS
HP	HIGH POINT	TC	TOP OF CURB
HWY	HIGHWAY	TYP	TYPICAL
ID	INSIDE DIAMETER	UON	UNLESS OTHERWISE NOTED
IE	INVERT ELEVATION		
IN	INCH OR INCHES	VC	VERTICAL CURVE
INV	INVERT	VERT	VERTICAL
L	LENGTH OR LENGTH OF CURVE		
LF	LINEAL FEET		

DEMOLITION NOTES TO CONTRACTOR:

1. EXISTING STRUCTURES AND SUBSTRUCTURES INDICATED TO BE REMOVED ON THESE DRAWINGS SHALL BE COMPLETELY REMOVED AND DISPOSED OF OFFSITE, UNLESS OTHERWISE NOTED. EXISTING FACILITIES THAT ARE DISCOVERED DURING CONSTRUCTION SHALL BE REPORTED TO THE ENGINEER AND COORDINATED WITH THE APPROPRIATE AGENCY FOR THEIR REMOVAL. CONTRACTOR SHALL NOTIFY THE AGENCY IN WRITING PRIOR TO COMMENCING THE WORK.
2. VOIDS RESULTING FROM THE REMOVAL OF STRUCTURES SHALL BE FILLED WITH SUITABLE MATERIALS APPROVED BY THE ENGINEER AND COMPACTED TO 90% MAXIMUM DENSITY PER ASTM STANDARD D-1557.
3. THE CONTRACTOR SHALL KEEP THE WORK AREA SUFFICIENTLY DAMPENED TO CONTROL DUST CAUSED BY THE CONTRACTOR'S OPERATIONS.
4. ALL DEBRIS AND FOREIGN MATERIAL SHALL BE REMOVED FROM THE PROJECT SITE AND DISPOSED OF AT APPROVED DISPOSAL SITES. THE CONTRACTOR SHALL OBTAIN THE NECESSARY PERMITS FOR THE TRANSPORTATION OF MATERIAL TO AND FROM THE PROJECT SITE, AND SHALL OBTAIN AND PAY FOR ALL REQUIRED PERMIT FEES FROM THE JURISDICTIONAL AGENCIES TO PERFORM THIS TASK.
5. NO CRUSHING OF EXISTING ASPHALT CONCRETE PAVEMENT IS ALLOWED ON SITE. ALL ASPHALT CONCRETE PAVEMENT REMOVED AS PART OF THE CONTRACTOR'S WORK SHALL BE PROPERLY DISPOSED OF OFFSITE.
6. ADJACENT LANDSCAPED AND IRRIGATED AREAS DAMAGED BY THE CONTRACTOR AS PART OF THIS PROJECT SHALL BE REPAIRED AND/OR REPLACED AT THE CONTRACTOR'S EXPENSE PRIOR TO THE COMPLETION OF THE PROJECT.
7. ALL PATCHING, REPAIRING, AND REPLACING OF MATERIALS AND SURFACES, CUT OR DAMAGED, IN EXECUTION OF WORK SHALL BE DONE WITH APPLICABLE MATERIALS SO THAT THE SURFACES REPLACED WILL UPON COMPLETION MATCH SURROUNDING SURFACES OF A SIMILAR NATURE.

PROJECT TEAM

OWNER:
LOS ANGELES WORLD AIRPORTS
AIRPORTS DEVELOPMENT DIVISION
MASIH HASHEMI
PROJECT MANAGER
7301 WORLD WAY WEST, 8TH FLOOR
LOS ANGELES, CA 90045
(424) 646-5873

CIVIL ENGINEER:
AECOM
DONALD C. WEBER, PE
PROJECT ENGINEER
999 TOWN & COUNTRY ROAD
ORANGE, CA 92868
(714) 567-2501

ECOLOGIST:
KEVIN MERK ASSOCIATES, LLC
KEVIN MERK
PRINCIPAL
PO BOX 318
SAN LUIS OBISPO, CA 93406
(805) 748-5837

Underground Service Alert of Southern California
CALL BEFORE YOU DIG
Call: TOLL FREE 811
TWO WORKING DAYS BEFORE YOU DIG

NOTICE TO CONTRACTOR:

1. SPECIFICATIONS

ALL WORK SHALL CONFORM TO THE PROJECT SPECIFICATIONS AND SHALL BE SUPPLEMENTED BY THE LATEST EDITION OF "THE STANDARD SPECIFICATIONS FOR PUBLIC WORKS CONSTRUCTION" (GREENBOOK), AND THE CITY OF LOS ANGELES DEPARTMENT OF PUBLIC WORK AMENDMENTS TO THE LATEST EDITION OF THE STANDARD SPECIFICATIONS FOR PUBLIC WORKS CONSTRUCTION" (BROWN BOOK) AS REQUIRED.

2. PLAN REFERENCES

THIS IMPROVEMENT CONSISTS OF WORK CALLED FOR ONLY ON THIS PLAN.

3. STANDARD PLANS FOR THIS PROJECT

ADVANCE CONSTRUCTION NOTICE SIGNS	.....S-791-1
TYPES OF CURB & GUTTER	.....S-410-2
JOINTS IN CONCRETE PAVEMENT	.....S-430-1
BROWN BOOK	

4. INSPECTION

ALL WORK AND MATERIALS ARE SUBJECT TO INSPECTION PURSUANT TO LATEST EDITION OF THE STANDARD SPECIFICATIONS. CALL (213) 485-5080 BEFORE NOON OF THE WORKING DAY BEFORE INSPECTION IS REQUIRED.

5. REMOVALS

A. REMOVE ALL EXISTING IMPROVEMENTS THAT INTERFERE WITH THE CONSTRUCTION OF THIS PROJECT.
B. ALL UTILITIES SHALL BE REMOVED OR RELOCATED BY OTHERS.

6. POTHOLE

THE CONTRACTOR IN CONFORMANCE TO LOS ANGELES CITY ORDINANCE 150,478, SHALL POTHOLE EXISTING SUBSURFACE INSTALLATION CARRYING UNSTABLE SUBSTANCES OR OTHER SUBSURFACE INSTALLATIONS AS INDICATED ON THESE PLANS AND DETERMINE THEIR LOCATIONS AND ELEVATIONS PRIOR TO COMMENCING EXCAVATION.

7. CURB AND GUTTERS

A. REPAIR AND/OR REPLACE ANY EXISTING BROKEN OR OFF GRADE CONCRETE CURB, GUTTER, SIDEWALK OR STREET PAVEMENT IMMEDIATELY ADJACENT TO OR WITHIN THE AREA OF THIS IMPROVEMENT TO THE SATISFACTION OF THE CITY ENGINEER.
B. CONSTRUCTION STAKES FOR CURB AND LONGITUDINAL GUTTER, WITH GRADE LESS THAN 0.5% SHALL BE SET AT 12.5 FEET ON CENTER.

8. NOTICE TO ADJACENT PROPERTY OWNERS

THE CONTRACTOR SHALL GIVE REASONABLE NOTICE TO ADJACENT PROPERTY OWNERS OR OCCUPANTS OF THIS IMPROVEMENT FRONTING, THEIR PROPERTY OWNERS OR OCCUPANTS OF THIS IMPROVEMENT PER SECTION 7-9 OF THE STANDARD SPECIFICATION.

9. ADVANCE CONSTRUCTION NOTICE SIGNS

IN ADDITION TO SIGNS REQUIRED BY THE PROVISIONS OF THE "WORK AREA TRAFFIC CONTROL HANDBOOK", LATEST EDITION, SIGNS FOR GIVING ADVANCE NOTICE TO MOTORISTS OF TRAFFIC DISRUPTION, MUST BE FURNISHED AND PLACED AS A PART OF THIS PROJECT IN ACCORDANCE WITH STANDARD PLAN S-791-1.

10. UNDERGROUND SERVICE ALERT

BEFORE COMMENCING ANY EXCAVATION, THE CONTRACTOR SHALL OBTAIN AN UNDERGROUND SERVICE ALERT INQUIRY I.D. NUMBER BY CALLING 1(800) 422-4133. THIS I.D. NUMBER MUST BE REPORTED TO THE BUREAU OF CONTRACT ADMINISTRATION WHEN CALLING FOR INSPECTION AT (213) 485-5080. THIS IDENTIFICATION NUMBER IS VALID FOR (10) DAYS ONLY. PRIOR TO START OF EXCAVATION WORK, CONTRACTOR SHALL NOTIFY UTILITY OWNERS WITHIN TWO WORKING DAYS SOON AFTER OBTAINING I.D. NUMBER.

11. SURVEY MONUMENT

SURVEY MONUMENT PRESERVATION IS REQUIRED AND SHALL INCLUDE SUBMITTAL OF PRE AND POST-CONSTRUCTION SURVEY MONUMENT TIES TO THE CITY OF LOS ANGELES, SURVEY DIVISION, AS REQUIRED BY SECTIONS 2-9.1 AND 2-9.3 OF THE DEPARTMENT OF PUBLIC WORKS ADDITIONS AND AMENDMENTS TO THE LATEST EDITION OF THE STANDARD SPECIFICATIONS FOR PUBLIC WORKS CONSTRUCTION.

12. SPECIAL NOTE

THE CONTRACTOR SHALL HAVE GRADE SHEETS AND DESIGN CHANGES APPROVED BY THE PRIVATE ENGINEER OF RECORD.

13. TRAFFIC LANE REQUIREMENTS

THE CONTRACTOR SHALL PROVIDE THE FOLLOWING TRAFFIC LANES DURING CONSTRUCTION ALONG VISTA DEL MAR AND SHALL OBTAIN A PEAK HOUR EXEMPTION FROM THE LOS ANGELES BUREAU OF ENGINEERING PRIOR TO CONSTRUCTION.

A. VISTA DEL MAR, NORTHBOUND: MAINTAIN ONE LANE OF TRAFFIC IN THE NORTHBOUND DIRECTION AT ALL TIMES
B. VISTA DEL MAR, SOUTHBOUND: MAINTAIN TWO LANES OF TRAFFIC IN THE SOUTHBOUND DIRECTION AT ALL TIMES
C. ALL ROADWAYS EAST OF VISTA DEL MAR THAT ARE OPEN TO THE PUBLIC SHALL NOT BE HINDERED BY CONSTRUCTION ACTIVITIES.

ALL TRAFFIC CONTROL WORK SHALL BE PERFORMED IN ACCORDANCE WITH THE MANUAL ON UNIFORM TRAFFIC CONTROL DEVICES (MUTCD, CURRENT EDITION) AND THE CALIFORNIA MUTCD, 2010 EDITION. TRAFFIC LANE CLOSURES ALONG VISTA DEL MAR REQUIRES WORKSITE SIGNING AND STRIPING PLANS (WORKSITE TRAFFIC CONTROL PLANS, WTCP). THE WTCP SHALL SHOW TYPICAL LANE CLOSURES AND PROPOSED TEMPORARY TRAFFIC CONTROL DEVICES. THE WTCP SHALL BE SUBMITTED IN FINAL DRAFT FORM AT LEAST TEN (10) DAYS PRIOR TO THE START OF CONSTRUCTION. CONTACT THE WESTERN DISTRICT OFFICE, LADOT AT (310) 575-8138 TO ARRANGE FOR PLAN REVIEWS. ANY DEVIATION FROM THE APPROVED WTCP FOR BR 402503 SHALL BE SUBMITTED IN WRITING AND RECEIVE APPROVAL FROM LADOT PRIOR TO IMPLEMENTATION.

14. TRAFFIC CONTROL DEVICES MAINTENANCE

THE CONTRACTOR SHALL PAY FOR THE RESTORATION OF ALL OBLITERATED STRIPING AND PAVEMENT MARKINGS AND FOR THE REINSTALLATION OF ALL MISSING, DAMAGED AND NECESSARY TRAFFIC CONTROL DEVICES (I.E. SIGNS, CURB MARKINGS, SPEED HUMPS, STAMPED CROSSWALKS, PARKING METERS, ETC.). WHEN NECESSARY, ADDITIONAL RELATED TRAFFIC CONTROL DEVICES, INCLUDING, BUT NOT LIMITED TO, DETOUR/CONSTRUCTION WORKSITE TRAFFIC CONTROL, SHALL BE INSTALLED IN SUPPORT OF THE PROJECT. THE CONTRACTOR WILL BE REQUIRED TO PHYSICALLY INSTALL SOME OR ALL OF THE TRAFFIC CONTROL DEVICES TO THE SATISFACTION OF LADOT. THE ENTIRE COST THEREOF SHALL BE BORNE BY THE CONTRACTOR. ALL STRIPING AND PAVEMENT MARKINGS SHALL BE INSTALLED UTILIZING THERMOPLASTIC MATERIALS PER LADOT SPECIFICATIONS. THE CONTRACTOR SHALL CONTACT LADOT'S CITYWIDE INVESTIGATIONS AT (213) 928-9612 PRIOR TO COMMENCING ANY WORK THAT REQUIRES TRAFFIC CONTROL DEVICES' MAINTENANCE.

GENERAL NOTES TO CONTRACTOR:

1. UNLESS NOTED OTHERWISE, ALL REFERENCES TO CONSTRUCTION STANDARD PLANS ARE MADE TO THE LATEST EDITION OF THE CITY OF LOS ANGELES STANDARD PLANS.
2. THE EXISTENCE, LOCATION AND CHARACTERISTICS OF UNDERGROUND UTILITY INFORMATION SHOWN DIAGRAMMATICALLY ON THESE DRAWINGS HAVE BEEN OBTAINED FROM AVAILABLE RECORD DATA. NO REPRESENTATION IS MADE AS TO THE ACCURACY OR COMPLETENESS OF SAID UTILITY INFORMATION. THE CONTRACTOR SHALL TAKE PRECAUTIONARY MEASURES TO PROTECT THE UTILITY LINES SHOWN AND ANY OTHER LINES NOT OF RECORD OR NOT SHOWN ON THESE DRAWINGS. THE CONTRACTOR SHALL MAKE REASONABLE INFERENCES AS TO THE EXISTING UNDERGROUND UTILITIES FROM OBSERVATION OF VISIBLE CONDITIONS AND APPURTENANCES AND TAKE APPROPRIATE MEASURES TO PROTECT UTILITIES. THE CONTRACTOR SHALL BE RESPONSIBLE FOR ANY COSTS ASSOCIATED WITH THE DISRUPTION OF OBSERVABLE CONDITIONS. IT SHALL BE THE RESPONSIBILITY OF THE CONTRACTOR TO VISIT THE JOB SITE AND VERIFY THE EXISTING CONDITIONS UNLESS CONCEALED BEFORE SUBMITTING HIS BID. ANY DISCREPANCIES SHALL BE REPORTED IMMEDIATELY TO THE ENGINEER USING THE PROPER REQUEST FOR INFORMATION FORMS PRIOR TO SUBMITTING HIS BID FOR PROPER ACTION.
3. IF EXISTING UTILITIES ARE EXPOSED OR DETERMINED TO EXIST DURING GRADING OR DEMOLITION ACTIVITIES, CONTRACTOR SHALL PROVIDE A FLAGGED STAKE THAT INDICATES THE UTILITY LOCATION. TYPE, SIZE, MATERIAL AND DEPTH. STAKES SHALL BE INSTALLED NO LESS THAN 50' ON CENTER ON STRAIGHT LINES AND AT BENDS.
4. CONTRACTOR SHALL NOTIFY UTILITY OWNER'S BOTH IN PRIVATE PROPERTY AND PUBLIC RIGHT OF WAY BEFORE EXISTING LATERALS ARE REMOVED OR EXPOSED.
5. THE CONTRACTOR SHALL BE RESPONSIBLE FOR THE PROTECTION OF PUBLIC AND PRIVATE PROPERTIES ADJACENT TO THE PROJECT SITE PER THE STANDARD SPECIFICATIONS.
6. THE CONTRACTOR SHALL PROTECT ALL EXISTING STRUCTURES IN THE AREA OF WORK WHICH ARE NOT INCLUDED IN THE CONSTRUCTION ACTIVITIES. ANY DAMAGE RESULTING FROM THE CONTRACTOR'S WORK SHALL BE REPAIRED AND/OR REPLACED AT NO ADDITIONAL COST TO THE OWNER OR AGENCY HAVING JURISDICTIONAL AUTHORITY.
7. ALL DRAWINGS ARE CONSIDERED TO BE A PART OF THE CONTRACT DOCUMENTS. THE CONTRACTOR SHALL BE RESPONSIBLE FOR THE REVIEW AND COORDINATION OF ALL DRAWINGS AND SPECIFICATIONS PRIOR TO THE START OF CONSTRUCTION. ANY DISCREPANCIES THAT OCCUR SHALL BE BROUGHT TO THE ATTENTION OF THE ENGINEER PRIOR TO THE START OF CONSTRUCTION SO THAT A CLARIFICATION CAN BE ISSUED. ANY WORK PERFORMED IN CONFLICT WITH THE CONTRACT DOCUMENTS OR ANY CODE REQUIREMENTS SHALL BE CORRECTED BY THE CONTRACTOR AT THEIR OWN EXPENSE AND AT NO ADDITIONAL COST TO THE OWNER.
8. THE CONTRACTOR SHALL VERIFY THE DIMENSIONS OF EXISTING FACILITIES PRIOR TO THE PROCUREMENT, FABRICATION AND INSTALLATION OF ANY NEW WORK.
9. ANY ADDITIONAL SURVEY'S OR TESTING AS A RESULT OF THE CONTRACTOR'S ERROR OR MISINFORMATION WILL BE CHARGED TO THE CONTRACTOR UNLESS CONTRACTOR HAS REQUESTED INFORMATION OR CLARIFICATION IN WRITING PRIOR TO START OF THE SPECIFIC WORK IN QUESTION.
10. ALL CONSTRUCTION AND MATERIALS SHALL BE AS SPECIFIED AND IN ACCORDANCE WITH ALL APPLICABLE CODES, ORDINANCES, LAWS, PERMITS, CONTRACT DOCUMENTS AND REFERENCED SPECIFICATIONS.
11. THE CONTRACTOR SHALL BE RESPONSIBLE FOR SAFETY AND PROTECTION WITHIN AND ADJACENT TO THE PROJECT SITE AND SHALL ADHERE TO ALL SAFETY CODES AND REGULATIONS. THIS WORK SHALL APPLY CONTINUOUSLY, AND SHALL NOT BE LIMITED TO NORMAL WORKING HOURS.
12. THE CONTRACTOR SHALL ENSURE THAT GRADED SURFACES USED FOR OFF ROAD PARKING OR MATERIALS LAYDOWN SHALL BE ESTABLISHED FOR DUST CONTROL IN ACCORDANCE WITH THE CITY OF LOS ANGELES REQUIREMENTS.
13. THE JOB SITE SHALL BE MAINTAINED IN A CLEAN, ORDERLY CONDITION FREE OR DEBRIS AND LITTER AND SHALL NOT BE UNREASONABLY ENCUMBERED WITH ANY MATERIALS OR EQUIPMENT. EACH SUBCONTRACTOR IMMEDIATELY UPON COMPLETION OF EACH PHASE OF HIS WORK SHALL REMOVE ALL TRASH AND DEBRIS AS A RESULT OF HIS OPERATION.
14. UPON COMPLETION OF THE PROJECT, THE CONTRACTOR SHALL REMOVE ALL CONSTRUCTION FENCING, APPURTENANCES, AND OFFICE TRAILERS FROM THE SITE.
15. EXISTING FEATURES SHOWN HEREON ARE BASED ON THE TOPOGRAPHIC SURVEY PREPARED BY FERRER & ASSOCIATES, DATED JULY 4, 2010.
16. REGISTERED DEPUTY GRADING INSPECTOR IS REQUIRED ON GRADING AND FOUNDATION EARTHWORK WHERE SITE EXCEEDS 60,000 SQUARE FEET.
17. NO FILL IS TO BE PLACED UNTIL THE CITY GRADING INSPECTOR HAS INSPECTED AND APPROVED BOTTOM EXCAVATION.
18. MAN-MAD FILL SHALL BE COMPACTED TO A MINIMUM RELATIVE COMPACTION OF 90% MAXIMUM DRY DENSITY WITHIN 40 FEET BELOW FINISH GRADE AND 93% OF MAXIMUM DRY DENSITY DEEPER THAN 40 FEET BELOW FINISH GRADE UNLESS A LOWER RELATIVE COMPACTION (NOT LESS THAN 90% OF MAXIMUM DRY DENSITY) IS JUSTIFIED BY A REGISTERED SOILS ENGINEER.
19. TEMPORARY EROSION CONTROL TO BE INSTALLED BETWEEN OCTOBER 1 AND APRIL 15. OBTAIN GRADING INSPECTOR'S AND DEPARTMENT OF PUBLIC WORKS APPROVAL OF PROPOSED PROCEDURES.

LEGEND:

Symbol	Description
—x—	EXISTING CHAIN LINK FENCE
—□—□—	EXISTING WALL
	EXISTING CONCRETE BARRIER
	EXISTING LIGHT POLE
	EXISTING LIGHT POLE WITH MAST ARM
PP	EXISTING POWER POLE
PP	EXISTING POWER POLE WITH GUY WIRE
SLPB	EXISTING STREET LIGHT PULL BOX
TMH	EXISTING COMMUNICATIONS MANHOLE
S	EXISTING SEWER MANHOLE
FH	EXISTING FIRE HYDRANT
GM	EXISTING GAS VALVE/METER
IRR	EXISTING IRRIGATION VALVE
— SS —	EXISTING SANITARY SEWER LINE
— W —	EXISTING WATER LINE
— G —	EXISTING GAS LINE
	BENCHMARK
	EXISTING TREE
— — —	EXISTING R/W

IN CONNECTION WITH REVOCABLE PERMIT R-1185-0024: VISTA DEL MAR AT GILLIS STREET, PALACE STREET, STERRY STREET AND BOLT STREET.

IN CONNECTION WITH LADBS PLAN CHECK NO. G12LA00046

PLANS PREPARED BY:
AECOM
999 Town and Country Road
Orange CA 92868
Phone: 714.567.2501
Fax: 714.567.2441
www.aecom.com

REGISTERED PROFESSIONAL ENGINEER DONALD C. WEBER No. C71238 Exp. 06-30-13 CIVIL STATE OF CALIFORNIA
02/05/2013

CITY OF LOS ANGELES DEPARTMENT OF PUBLIC WORKS BUREAU OF ENGINEERING

LA DPW ENGINEERING Serving the Present; Designing the Future

NO.	REVISIONS:	DATE:	BY:
1	ADDED NOTES AND OWNER INFORMATION		
1	ADDED REFERENCE TO PROJECT SPECIFICATIONS		
	WORK ACCEPTED		

SERIAL NO.

B - PERMITS BR402503

INDEX NO.

BUREAU OF ENGINEERING APPROVAL:
OFFICE: WEST L.A. DISTRICT
CHECKED BY: (PRINTED NAME)
SIGNATURE: DATE:

AECOM DESIGN GROUP
ENGINEER: DONALD C. WEBER, PE
DESIGNED BY: DARCY SULZ
DRAWN BY: DARCY SULZ
CHECKED BY: DONALD C. WEBER, PE
APPROVED BY: JOHN BEHZADI, PE

VERTICAL CONTROL: BM 17-15135, NGVD29, 1985 ADJ
HORIZONTAL CONTROL: NAD 83 STATE PLANE COORDINATES, ZONE V

SHEET TITLE: LEGEND, ABBREVIATIONS AND NOTES
PROJECT: COASTAL DUNES IMPROVEMENT PROJECT
ADDRESS: 7600 BLOCK OF VISTA DEL MAR PLAYA DEL REY, CA 90293

PROJECT NO.
DRAWING NO. 2

SHEET 2 OF 18 SHEETS

REVISION DATES (DESIGN STAGE ONLY)

Sheet Version 4.01 2-2005

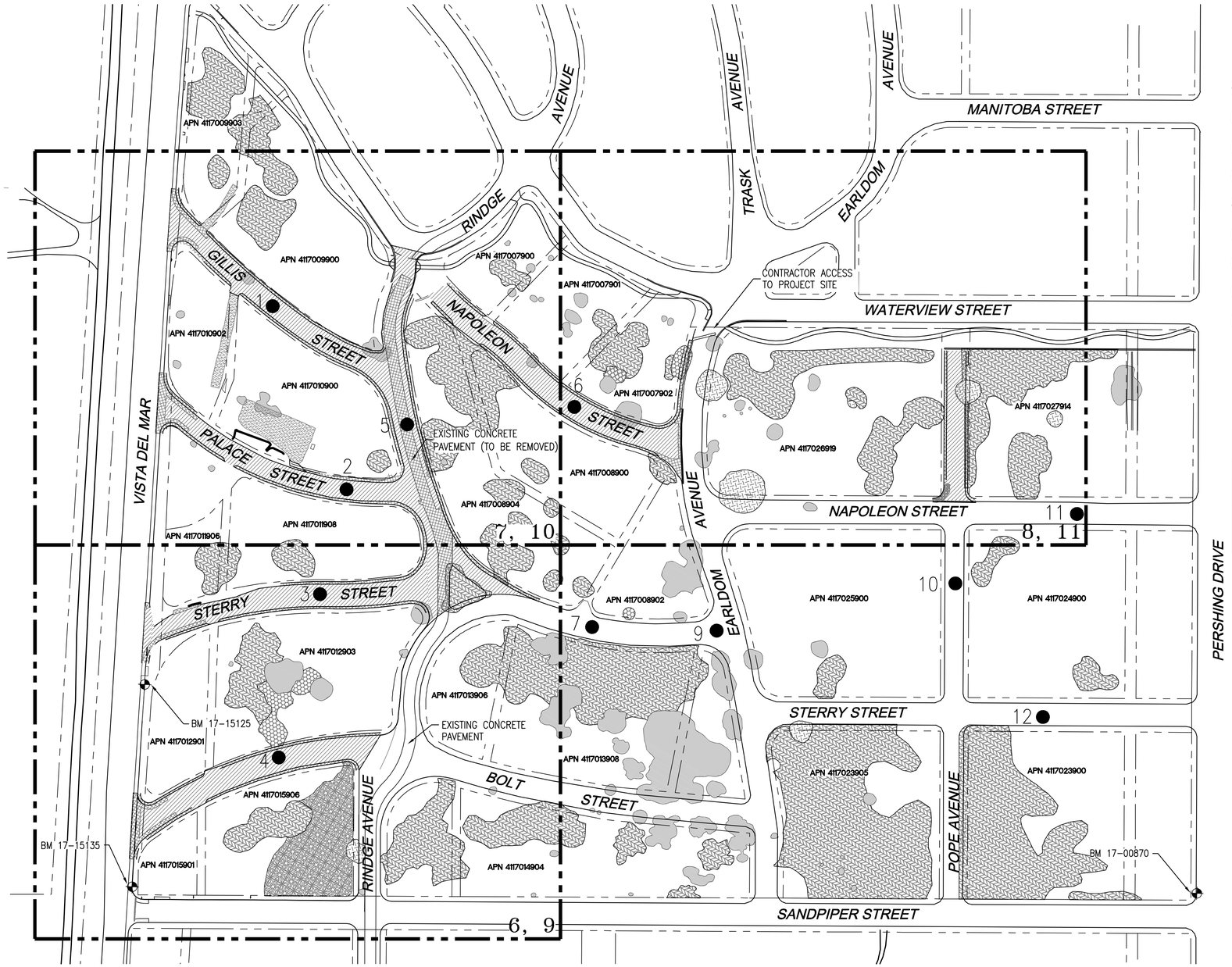

PARCEL INFORMATION

THE PROJECT IMPROVEMENTS SHOWN WITHIN THESE CONSTRUCTION DOCUMENTS AFFECT THE FOLLOWING ASSESSOR PARCELS AS SHOWN HEREON:

ASSESSORS PARCEL NUMBER	TRACT NO.	LOT NO.	BLOCK
4117007900	8557	1	45
4117007901	8557	10	45
4117007902	8557	15	45
4117008904	8557	23	46
4117009900	8557	26	–
4117009903	8557	12	41
4117010900	8557	11	48
4117010902	8557	19	48
4117011906	8557	14	–
4117011908	8557	10	–
4117012901	8557	17–22	51
4117012903	8557	1–15	–
4117015901	8557	7	52
4117015906	8557	1–8	52
4117026914	8557	16	38
4117027919	8557	20	43

1

BORE HOLE LOCATIONS AND SECTION THICKNESS OF PAVEMENT

BORE HOLE	LOCATION	MATERIAL	THICKNESS IN INCHES	SUBSECTION 1 PROFILE IN INCHES	SUBSECTION 2 PROFILE IN INCHES
1	GILLIS	ASPHALT	3.5	3.5 – 9 DG	9–12.5
2	PLACE	ASPHALT	3	3–9	
3	STERRY WEST	ASPHALT	4	4–12 DG	
4	BOLT WEST	ASPHALT	2	2–8	8–16 CLEAN SOIL
5	RINDGE	CONCRETE	6.5	6.5–13	
6	NAPOLEON MID	ASPHALT	3.5	3.5–12	12–18 AC GRINDINGS
7	STERRY MID	ASPHALT	4	4–11	
8					
9	EARLDOM	ASPHALT	4	4–8, 4–12 AC	
10	POE	ASPHALT	4	GRINDINGS	
11	NAPOLEON EAST	ASPHALT	4	4–11	
12	STERRY EAST	ASPHALT	4	4–12 DG	12–18

NOTE:
BORE HOLE AND SECTIONAL THICKNESS INFORMATION PREPARED BY WALLACE LABORATORIES, LLC. (FEBRUARY 2010)

BENCHMARK

BM 17–15125: WIRE SPIKE IN EAST CURB OF VISTA DEL MAR, 38.6' SOUTH OF CURB RETURN BC; LOCATED SOUTH OF STERRY STREET, 0.30 MILES SOUTH OF WATERVIEW STREET.

BM 17–15135: WIRE SPIKE IN EAST CURB OF VISTA DEL MAR, 1.30' NORTH OF CURB RETURN BC; LOCATED NORTH OF SANDPIPER STREET, 0.39 MILES SOUTH OF WATERVIEW STREET.

BM NO. 17–15125
ELEVATION = 47.283 (NGVD 29, 1985 ADJ.)
N: 1804039.36
E: 6426848.18

BM NO. 17–15135
ELEVATION = 52.198 (NGVD 29, 1985 ADJ.)
N: 1803713.07
E: 6427006.47

BM NO. 17–00870
N: 1804638.11
E: 6428670.92

BASIS OF BEARINGS

THE PROJECT BASIS OF BEARINGS IS THE MEASURED BEARING OF N25°52'44"W BETWEEN BM 17–15135 AND BM 17–15125.

A CONSTRUCTION CENTERLINE ALONG VISTA DEL MAR HAS BEEN ESTABLISHED HERON WITH A MEASURED BEARING OF N25°52'40"W THE RECORDED BEARING ALONG VISTA DEL MAR IS N26°04'38"W AS IDENTIFIED IN THE CITY OF LOS ANGELES SURVEY FIELD BOOK 093–153.

LEGEND

- ASPHALT PAVEMENT REMOVAL
- CONCRETE REMOVAL
- ACACIA HABITAT TO BE REMOVED
- ICE PLANT HABITAT TO BE REMOVED
- GIANT REED HABITAT TO BE REMOVED
- ELM HABITAT TO BE REMOVED
- MYOPORUM HABITAT TO BE REMOVED
- LONG BEAKED FILAREE HABITAT TO BE REMOVED

PLAN

SCALE: 1"=100'

Underground Service Alert of Southern California
Call: TOLL FREE 811
TWO WORKING DAYS BEFORE YOU DIG

IN CONNECTION WITH REVOCABLE PERMIT R-1185-0024: VISTA DEL MAR AT GILLIS STREET, PALACE STREET, STERRY STREET AND BOLT STREET.

IN CONNECTION WITH LADBS PLAN CHECK NO. G12LA00046

REGISTERED PROFESSIONAL ENGINEER DONALD C. WEBER No. C71238 Exp. 12-31-13 CIVIL STATE OF CALIFORNIA 02/05/2013

PLANS PREPARED BY:
AECOM
999 Town and Country Road
Orange CA 92868
Phone: 714.567.2501
Fax: 714.567.2441
www.aecom.com

BUREAU OF ENGINEERING
LA DPW ENGINEERING Design for Public Benefit

NO.	REVISIONS:	DATE:	BY:
1	ADDED ASSESSOR PARCEL INFORMATION		

WORK ACCEPTED — SERIAL NO.
B - PERMITS BR402503
INDEX NO.

BUREAU OF ENGINEERING APPROVAL
OFFICE: WEST L.A. DISTRICT
CHECKED BY: (PRINTED NAME)
SIGNATURE: DATE:

CITY OF LOS ANGELES — DEPARTMENT OF PUBLIC WORKS — BUREAU OF ENGINEERING

AECOM
DESIGN GROUP
ENGINEER: DONALD C. WEBER, PE
DESIGNED BY: DARCY SULZ
DRAWN BY: DARCY SULZ
CHECKED BY: DONALD C. WEBER, PE
APPROVED BY: JOHN BEHZADI, PE

VERTICAL CONTROL: BM 17-15135, NGVD29, 1985 ADJ.
HORIZONTAL CONTROL: NAD 83 STATE PLANE COORDINATES, ZONE V

SHEET TITLE: OVERALL SITE PLAN
PROJECT: COASTAL DUNES IMPROVEMENT PROJECT
ADDRESS: 7600 BLOCK OF VISTA DEL MAR PLAYA DEL REY, CA 90293

PROJECT NO.
DRAWING NO. 3
SHEET 3 OF 18 SHEETS

THE CITY OF LOS ANGELES OR ITS OFFICERS OR AGENTS SHALL NOT BE RESPONSIBLE FOR THE ACCURACY OR COMPLETENESS OF ELECTRONIC COPIES OF THIS PLAN SHEET.

REVISION DATES (DESIGN STAGE ONLY)

Sheet Version 4.01 2-2005

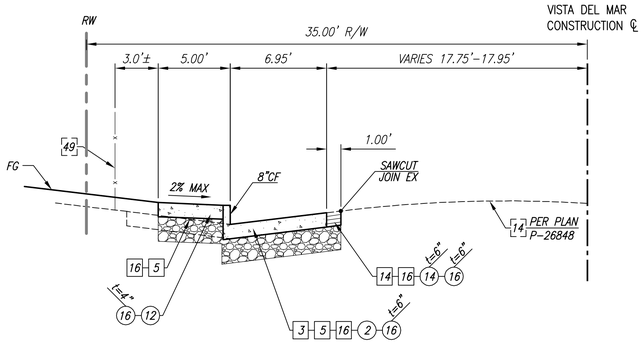

VISTA DEL MAR STREET SECTION

SCALE: NOT TO SCALE
STA 10+93.57 – STA 12+11.57

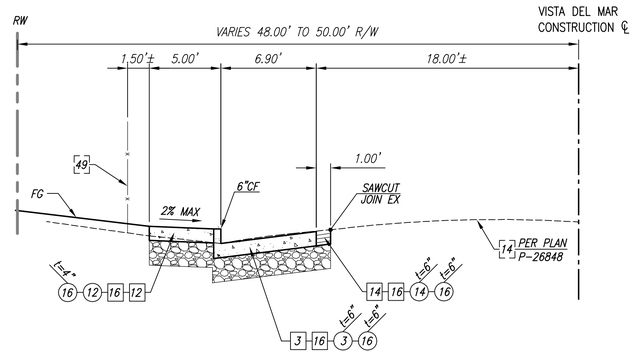

VISTA DEL MAR STREET SECTION

SCALE: NOT TO SCALE
STA 14+44.91 – STA 15+52.91

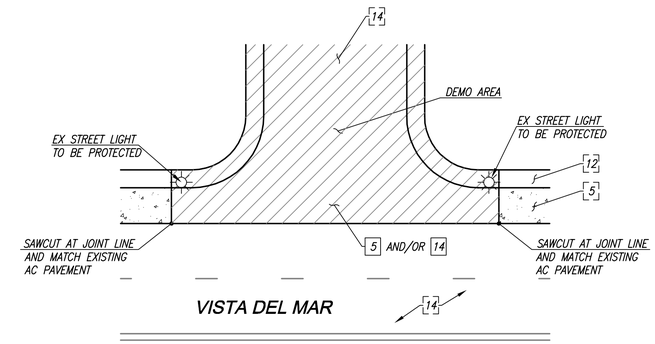

TYPICAL DEMOLITION DETAIL ALONG VISTA DEL MAR

SCALE: NOT TO SCALE

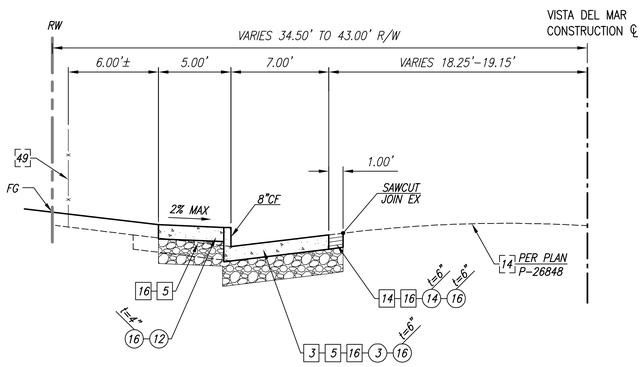

VISTA DEL MAR STREET SECTION

SCALE: NOT TO SCALE
STA 18+56.81 – STA 19+65.00

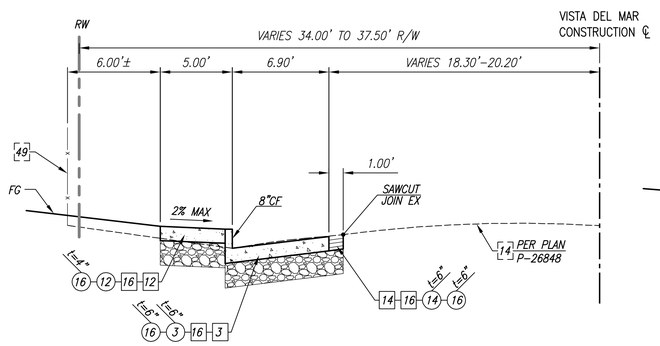

VISTA DEL MAR STREET SECTION

SCALE: NOT TO SCALE
STA 21+82.67 – STA 22+94.67

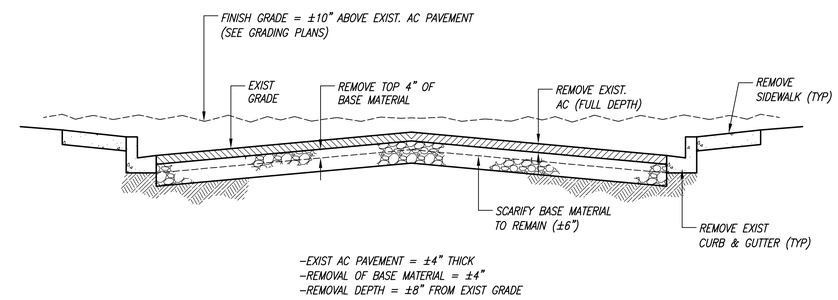

TYPICAL STREET DEMOLITION DETAIL

SCALE: NOT TO SCALE

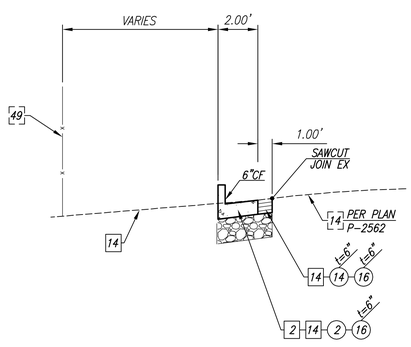

NAPOLEON STREET SECTION

SCALE: NOT TO SCALE
STA 10+00.00 – STA 10+75.26

CONSTRUCTION NOTES AND SYMBOLS

- CONSTRUCT
- EXISTING
- REMOVE
- REMODEL EXISTING
- REMOVE & CONSTRUCT
- WORK BY OTHERS

2. TYPE C INTEGRAL CURB & GUTTER, b=6", a=2'
3. TYPE C INTEGRAL CURB & CONC. PVMT, b=6", SEE PLAN, c=VARIES
5. CONCRETE LONGITUDINAL GUTTER
12. CONCRETE WALK, t=4"
14. ASPHALT CONCRETE PAVEMENT, t=AS SHOWN
16. UNTREATED BASE MATERIAL, t=AS SHOWN
49. CHAINLINK FENCE

Underground Service Alert of Southern California
Call: TOLL FREE 811
TWO WORKING DAYS BEFORE YOU DIG

IN CONNECTION WITH REVOCABLE PERMIT R-1185-0024: VISTA DEL MAR AT GILLIS STREET, PALACE STREET, STERRY STREET AND BOLT STREET.

IN CONNECTION WITH LADBS PLAN CHECK NO. G12LA00046

PLANS PREPARED BY:
AECOM
999 Town and Country Road
Orange CA 92868
Phone: 714.567.2501
Fax: 714.567.2441
www.aecom.com

REGISTERED PROFESSIONAL ENGINEER DONALD C. WEBER No. C71238 Exp. 12-31-13 CIVIL STATE OF CALIFORNIA 02/05/2013

BUREAU OF ENGINEERING
LA DPW ENGINEERING Design for Public Benefit

NO.	REVISIONS:	DATE:	BY:

WORK ACCEPTED | SERIAL NO.

B - PERMITS BR402503

INDEX NO.

BUREAU OF ENGINEERING APPROVAL:
OFFICE: WEST L.A. DISTRICT
CHECKED BY: (PRINTED NAME)
SIGNATURE: DATE:

CITY OF LOS ANGELES DEPARTMENT OF PUBLIC WORKS

AECOM
DESIGN GROUP
ENGINEER: DONALD C. WEBER, PE
DESIGNED BY: DARCY SULZ
DRAWN BY: DARCY SULZ
CHECKED BY: DONALD C. WEBER, PE
APPROVED BY: JOHN BEHZADI, PE

VERTICAL CONTROL: BM 17-15135, NGVD29, 1985 ADJ
HORIZONTAL CONTROL: NAD 83 STATE PLANE COORDINATES, ZONE V

SHEET TITLE: TYPICAL SECTIONS

PROJECT: COASTAL DUNES IMPROVEMENT PROJECT

ADDRESS: 7600 BLOCK OF VISTA DEL MAR PLAYA DEL REY, CA 90293

PROJECT NO.

DRAWING NO. 4

SHEET 4 OF 18 SHEETS

THE CITY OF LOS ANGELES OR ITS OFFICERS OR AGENTS SHALL NOT BE RESPONSIBLE FOR THE ACCURACY OR COMPLETENESS OF ELECTRONIC COPIES OF THIS PLAN SHEET.

REVISION DATES (DESIGN STAGE ONLY)

Sheet Version 4.01 2-2005

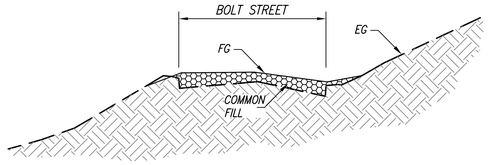

A–A
5
SCALE: 1"=20' (HORIZ.)
1"=4' (VERT.)

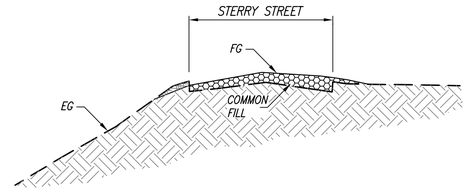

B–B
5
SCALE: 1"=20' (HORIZ.)
1"=4' (VERT.)

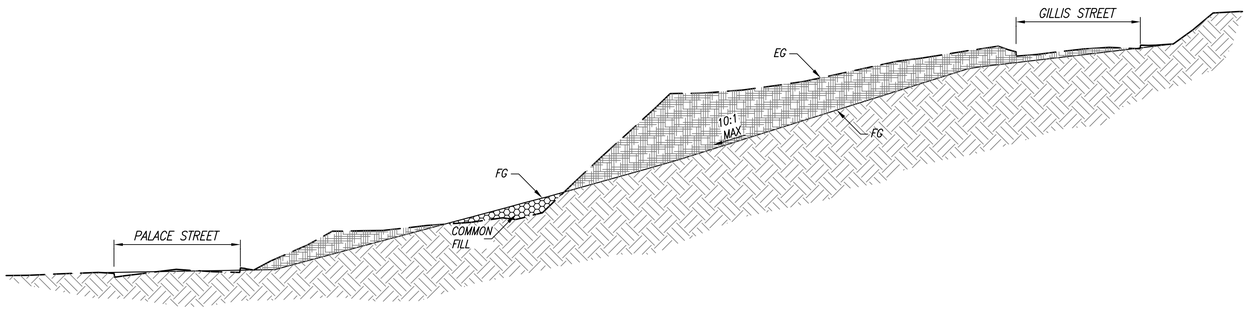

C–C
5
SCALE: 1"=20' (HORIZ.)
1"=10' (VERT.)

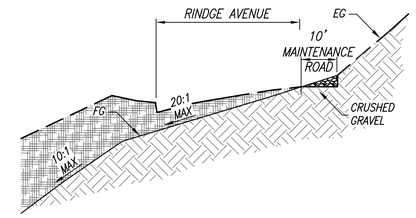

D–D
5
SCALE: 1"=20' (HORIZ.)
1"=4' (VERT.)

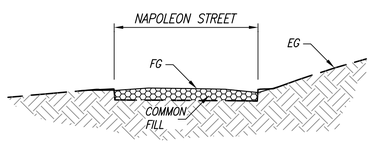

E–E
5
SCALE: 1"=20' (HORIZ.)
1"=4' (VERT.)

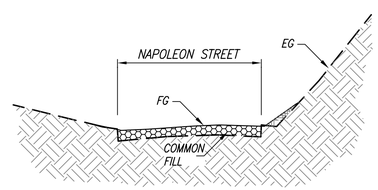

F–F
5
SCALE: 1"=20' (HORIZ.)
1"=4' (VERT.)

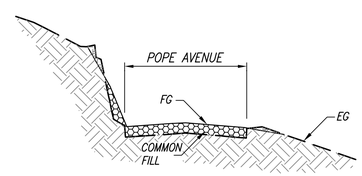

G–G
5
SCALE: 1"=20' (HORIZ.)
1"=4' (VERT.)

LEGEND

- EXISTING GROUND
- COMMON FILL
- AREAS OF CUT

ESTIMATED EARTHWORK QUANTITIES:

	CUT (C.Y.)	FILL (C.Y.)
RAW QUANTITIES:	8,075	6,790
SUB TOTAL:	1,285	

NOTES:

1. ESTIMATED EARTHWORK QUANTITIES ARE NOT INTENDED TO BE USED FOR BIDDING PURPOSES. CONTRACTOR IS RESPONSIBLE FOR THEIR OWN CUT/FILL QUANTITIES.
2. ANY EXCESS MATERIAL SUITABLE TO BE REUSED ON THE PROJECT SITE IS TO BE DISPOSED OF IN A LOCATION APPROVED BY THE OWNER. CONTRACTOR IS NOT TO EXPORT ANY SOILS OFF SITE.

1

Underground Service Alert of Southern California
Call: TOLL FREE 811
TWO WORKING DAYS BEFORE YOU DIG

IN CONNECTION WITH REVOCABLE PERMIT R-1185-0024: VISTA DEL MAR AT GILLIS STREET, PALACE STREET, STERRY STREET AND BOLT STREET.

IN CONNECTION WITH LADBS PLAN CHECK NO. G12LA00046

REGISTERED PROFESSIONAL ENGINEER DONALD C. WEBER No. C71228 CIVIL STATE OF CALIFORNIA 02/05/2013

PLANS PREPARED BY:
AECOM
999 Town and Country Road
Orange CA 92868
Phone: 714.567.2501
Fax: 714.567.2441
www.aecom.com

THE CITY OF LOS ANGELES OR ITS OFFICERS OR AGENTS SHALL NOT BE RESPONSIBLE FOR THE ACCURACY OR COMPLETENESS OF ELECTRONIC COPIES OF THIS PLAN SHEET.

REVISION DATES (DESIGN STAGE ONLY)

Sheet Version 4.01 2-2005

BUREAU OF ENGINEERING
LA DPW ENGINEERING Building for the Future Dedicated to the Future

NO.	REVISIONS:	DATE:	BY:
1	ADDED GENERAL NOTE		

WORK ACCEPTED | SERIAL NO.

B - PERMITS
BR402503

INDEX NO.

BUREAU OF ENGINEERING APPROVAL
OFFICE: WEST L.A. DISTRICT
CHECKED BY: (PRINTED NAME)
SIGNATURE: DATE:

BUREAU OF PUBLIC WORKS

AECOM DESIGN GROUP

ENGINEER:	DONALD C. WEBER, PE
DESIGNED BY:	DARCY SULZ
DRAWN BY:	DARCY SULZ
CHECKED BY:	DONALD C. WEBER, PE
APPROVED BY:	JOHN BEHZADI, PE

DEPARTMENT OF PUBLIC WORKS

CITY OF LOS ANGELES

VERTICAL CONTROL: BM 17-15135, NGVD29, 1985 ADJ
HORIZONTAL CONTROL: NAD 83 STATE PLANE COORDINATES, ZONE V

SHEET TITLE: GRADING SECTIONS

PROJECT: COASTAL DUNES IMPROVEMENT PROJECT

ADDRESS: 7600 BLOCK OF VISTA DEL MAR
PLAYA DEL REY, CA 90293

PROJECT NO.

DRAWING NO. 5

SHEET 5 OF 18 SHEETS

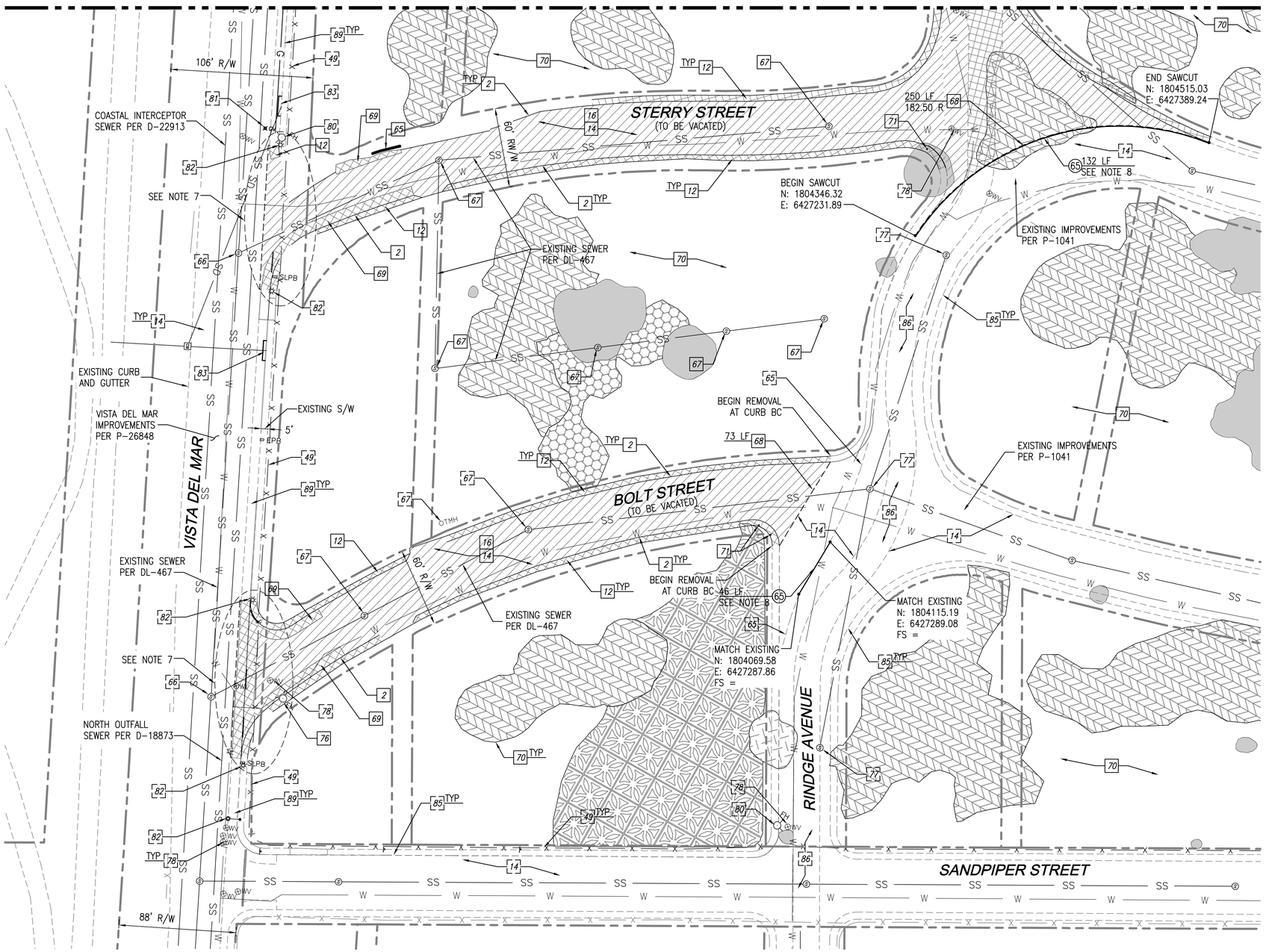

DEMOLITION NOTES & SYMBOLS

CONSTRUCT
EXISTING
REMOVE
REMODEL EXISTING
REMOVE & CONSTRUCT
WORK BY OTHERS

2. TYPE C INTEGRAL CURB & GUTTER. PVMT, b=6", SEE PLAN, c=VARIES
5. CONCRETE LONGITUDINAL GUTTER
12. CONCRETE WALK, t=4"
14. ASPHALT CONCRETE PAVEMENT, t=AS SHOWN
16. UNTREATED BASE MATERIAL, t=AS SHOWN
20. EXISTING TREE
38. RELOCATE AND/OR ADJUST STREET LIGHTING PULL BOX TO GRADE
46. REMOVE AND/OR ADJUST WATER METER AND WATER METER HOUSING/BOX TO GRADE
49. CHAIN LINK FENCE
65. ASPHALT CONCRETE DIKE
66. PLUG EXISTING SEWER LINE ENTERING MANHOLE FROM THE EAST AND BACKFILL WITH ONE-SACK SLURRY PER DETAIL 1 ON SHEET 16.
67. SPOT WELD EXISTING MANHOLE FRAME AND COVER PER DETAIL 2 ON SHEET 16.
68. SAWCUT EXISTING PAVEMENT MIN. 2.0' TO NEAT CLEAN EDGE. LF PER PLAN
69. CONCRETE PAVEMENT AND UNDERLYING BASE MATERIAL
70. NON-NATIVE VEGETATION
71. SIGN POST AND FOUNDATION
72. SIDEWALK RAMP
73. STREET LIGHT AND POLE. SEE NOTE 3.
74. POWER POLE AND GUY WIRES
75. RETAINING WALL AND FOUNDATION
76. FIRE HYDRANT. SEE DETAIL 3 ON SHEET 16
77. PROTECT UTILITY MANHOLE
78. PROTECT WATER VALVE
80. PROTECT FIRE HYDRANT
81. PROTECT GAS VALVE
82. PROTECT STREET LIGHT AND POLE
83. PROTECT CATCH BASIN
85. PROTECT CURB, OR CURB AND GUTTER
86. PROTECT CONCRETE PAVEMENT
88. SHRUB
89. PROTECT EXISTING CONCRETE SIDEWALK
90. PROTECT POWER POLE AND OVERHEAD ELECTRICAL LINES

SHEET NOTES:

1. DEMOLITION ACTIVITIES SHOWN ON THIS DRAWING ARE LIMITED TO THOSE AREAS EAST OF VISTA DEL MAR. REFER TO SHEETS 9, 10 AND 11 FOR DEMOLITION WORK AT THE STREET INTERSECTION(S) SHOWN ON THIS DRAWING. UNLESS NOTED OTHERWISE, ALL UTILITIES LOCATED ALONG VISTA DEL MAR SHALL BE PROTECTED IN PLACE.
2. THE LIMITS OF ALL SIDEWALK THAT IS TO BE REMOVED SHALL BE AS SHOWN ON THIS DRAWING AND SHALL BE REMOVED TO THE NEAREST JOINT LINE.
3. ALL STREET LIGHT FOUNDATIONS, ELECTRICAL PULL BOXES AND ASSOCIATED CONDUITS SHALL BE ABANDONED IN PLACE.
4. THE EXISTENCE AND LOCATION OF EXISTING VEGETATION IS SHOWN TO THE GREATEST EXTENT PRACTICAL ON THIS DRAWING. CONTRACTOR SHALL REMOVE EXISTING VEGETATION AS NEEDED TO PERFORM CONSTRUCTION ACTIVITIES.
5. EXISTING WATER METER BOXES NOT SHOWN ON THIS DRAWING SHALL BE REMOVED AS PART OF THE SIDEWALK REMOVALS.
6. ALL WATER LINES SHOWN ON THIS DRAWING SHALL BE ABANDONED IN PLACE. EXISTING SYSTEM TO BE CUT AND CAPPED BY LADWP. CONTRACTOR TO COORDINATE WITH LADWP AS NEEDED DURING CONSTRUCTION.
7. SEE "TYPICAL DEMOLITION DETAIL ALONG VISTA DEL MAR" ON SHEET 4 FOR REMOVALS AT THE INTERSECTIONS OF VISTA DEL MAR.
8. REFER TO DETAIL 4 ON SHEET 16 FOR TYPICAL AC DIKE INSTALLATION.

LEGEND

ASPHALT PAVEMENT REMOVAL
CONCRETE REMOVAL
ACACIA HABITAT TO BE REMOVED
ICE PLANT HABITAT TO BE REMOVED
GIANT REED HABITAT TO BE REMOVED
ELM HABITAT TO BE REMOVED
MYOPORUM HABITAT TO BE REMOVED
LONG BEAKED FILAREE HABITAT TO BE REMOVED

PLAN
SCALE: 1"=40'

Underground Service Alert of Southern California
Call: TOLL FREE 811
TWO WORKING DAYS BEFORE YOU DIG

IN CONNECTION WITH REVOCABLE PERMIT R-1185-0024: VISTA DEL MAR AT GILLIS STREET, PALACE STREET, STERRY STREET AND BOLT STREET.

IN CONNECTION WITH LADBS PLAN CHECK NO. G12LA00046

REGISTERED PROFESSIONAL ENGINEER DONALD C. WEBER No. C71238 Exp. 12-31-13 CIVIL STATE OF CALIFORNIA 02/05/2013

PLANS PREPARED BY:
AECOM
999 Town and Country Road
Orange CA 92868
Phone: 714.567.2501
Fax: 714.567.2441
www.aecom.com

THE CITY OF LOS ANGELES OR ITS OFFICERS OR AGENTS SHALL NOT BE RESPONSIBLE FOR THE ACCURACY OR COMPLETENESS OF ELECTRONIC COPIES OF THIS PLAN SHEET.

REVISION DATES (DESIGN STAGE ONLY)

Sheet Version 4.01 2-2005

BUREAU OF ENGINEERING
LA DPW ENGINEERING Design for Life
DATE: BY:
NO. REVISIONS:
WORK ACCEPTED
SERIAL NO.
B - PERMITS BR402503
INDEX NO.

BUREAU OF ENGINEERING APPROVAL:
OFFICE: WEST L.A. DISTRICT
CHECKED BY: (PRINTED NAME)
SIGNATURE: DATE:

CITY OF LOS ANGELES DEPARTMENT OF PUBLIC WORKS

ENGINEER: AECOM
DESIGN GROUP
DESIGNED BY: DONALD C. WEBER, PE
DRAWN BY: DARCY SULZ
CHECKED BY: DARCY SULZ
DONALD C. WEBER, PE
APPROVED BY: JOHN BEHZADI, PE

VERTICAL CONTROL: BM 17-15135, NGVD29, 1985 ADJ
HORIZONTAL CONTROL: NAD 83 STATE PLANE COORDINATES, ZONE V

SHEET TITLE: DEMOLITION PLAN (1 OF 3)
PROJECT: COASTAL DUNES IMPROVEMENT PROJECT
ADDRESS: 7600 BLOCK OF VISTA DEL MAR PLAYA DEL REY, CA 90293

PROJECT NO.
DRAWING NO. 6
SHEET 6 OF 18 SHEETS

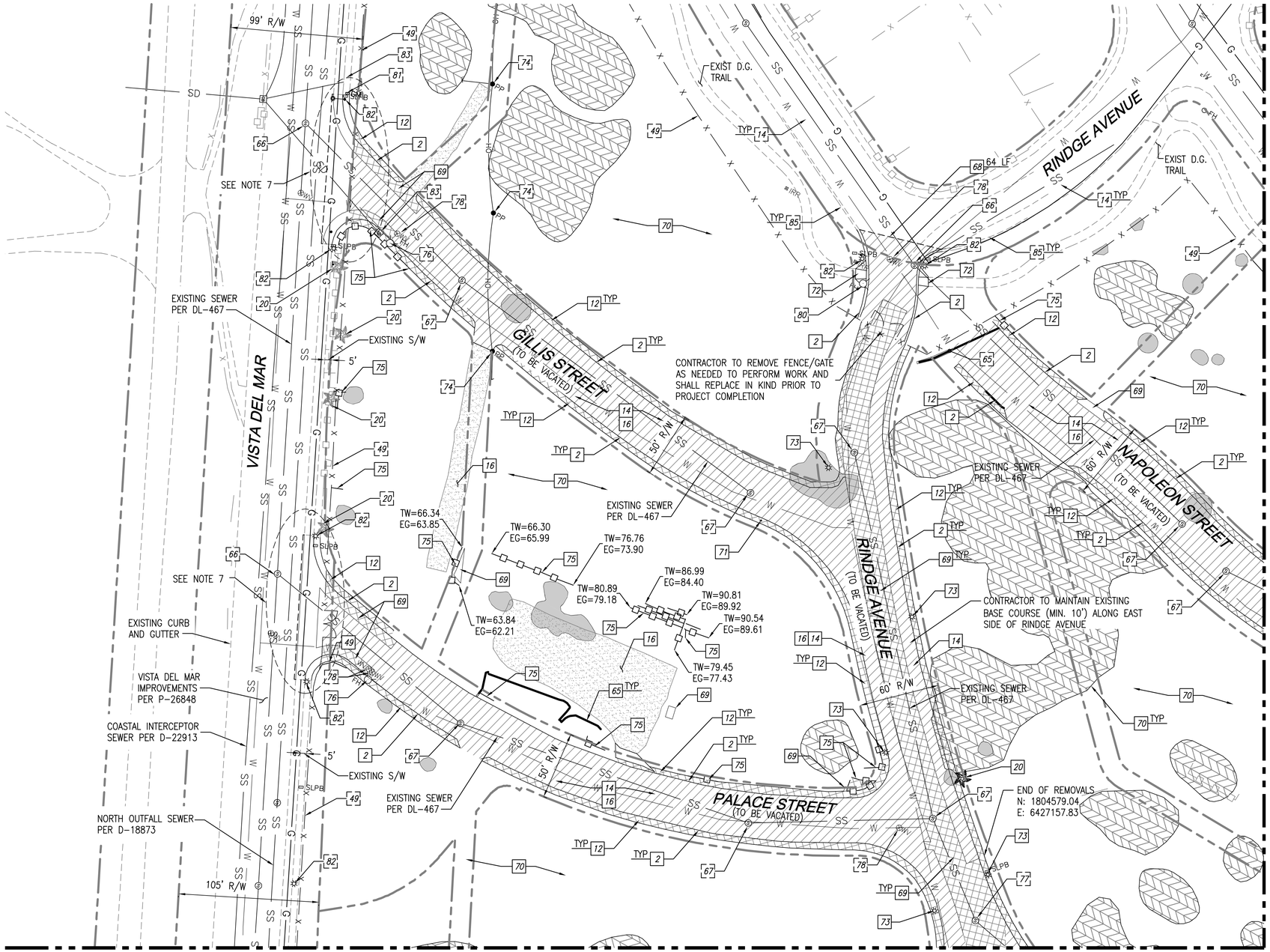

DEMOLITION NOTES & SYMBOLS

CONSTRUCT
EXISTING
REMOVE
REMODEL EXISTING
REMOVE & CONSTRUCT
WORK BY OTHERS

2. TYPE C INTEGRAL CURB & GUTTER. PVMT, b=6", SEE PLAN, c=VARIES
5. CONCRETE LONGITUDINAL GUTTER
12. CONCRETE WALK, t=4"
14. ASPHALT CONCRETE PAVEMENT, t=AS SHOWN
16. UNTREATED BASE MATERIAL, t=AS SHOWN
20. EXISTING TREE
38. RELOCATE AND/OR ADJUST STREET LIGHTING PULL BOX TO GRADE
46. REMOVE AND/OR ADJUST WATER METER AND WATER METER HOUSING/BOX TO GRADE
49. CHAIN LINK FENCE
65. ASPHALT CONCRETE DIKE
66. PLUG EXISTING SEWER LINE ENTERING MANHOLE FROM THE EAST AND BACKFILL WITH ONE-SACK SLURRY PER DETAIL 1 ON SHEET 16.
67. SPOT WELD EXISTING MANHOLE FRAME AND COVER PER DETAIL 2 ON SHEET 16.
68. SAWCUT EXISTING PAVEMENT MIN. 2.0' TO NEAT CLEAN EDGE. LF PER PLAN
69. CONCRETE PAVEMENT AND UNDERLYING BASE MATERIAL
70. NON-NATIVE VEGETATION
71. SIGN POST AND FOUNDATION
72. SIDEWALK RAMP
73. STREET LIGHT AND POLE. SEE NOTE 3.
74. POWER POLE AND GUY WIRES
75. RETAINING WALL AND FOUNDATION
76. FIRE HYDRANT. SEE DETAIL 3 ON SHEET 16
77. PROTECT UTILITY MANHOLE
78. PROTECT WATER VALVE
80. PROTECT FIRE HYDRANT
81. PROTECT GAS VALVE
82. PROTECT STREET LIGHT AND POLE
83. PROTECT CATCH BASIN
85. PROTECT CURB, OR CURB AND GUTTER
86. PROTECT CONCRETE PAVEMENT
88. SHRUB
89. PROTECT EXISTING CONCRETE SIDEWALK
90. PROTECT POWER POLE AND OVERHEAD ELECTRICAL LINES

SHEET NOTES:

1. DEMOLITION ACTIVITIES SHOWN ON THIS DRAWING ARE LIMITED TO THOSE AREAS EAST OF VISTA DEL MAR. REFER TO SHEETS 9, 10, AND 11 FOR DEMOLITION WORK AT THE STREET INTERSECTION(S) SHOWN ON THIS DRAWING. UNLESS NOTED OTHERWISE, ALL UTILITIES LOCATED ALONG VISTA DEL MAR SHALL BE PROTECTED IN PLACE.
2. THE LIMITS OF ALL SIDEWALK THAT IS TO BE REMOVED SHALL BE AS SHOWN ON THIS DRAWING AND SHALL BE REMOVED TO THE NEAREST JOINT LINE.
3. ALL STREET LIGHT FOUNDATIONS, ELECTRICAL PULL BOXES AND ASSOCIATED CONDUITS SHALL BE ABANDONED IN PLACE.
4. THE EXISTENCE AND LOCATION OF EXISTING VEGETATION IS SHOWN TO THE GREATEST EXTENT PRACTICAL ON THIS DRAWING. CONTRACTOR SHALL REMOVE EXISTING VEGETATION AS NEEDED TO PERFORM CONSTRUCTION ACTIVITIES.
5. EXISTING WATER METER BOXES NOT SHOWN ON THIS DRAWING SHALL BE REMOVED AS PART OF THE SIDEWALK REMOVALS.
6. ALL WATER LINES SHOWN ON THIS DRAWING SHALL BE ABANDONED IN PLACE. EXISTING SYSTEM TO BE CUT AND CAPPED BY LADWP. CONTRACTOR TO COORDINATE WITH LADWP AS NEEDED DURING CONSTRUCTION.
7. SEE "TYPICAL DEMOLITION DETAIL ALONG VISTA DEL MAR" ON SHEET 4 FOR REMOVALS AT THE INTERSECTIONS OF VISTA DEL MAR.

LEGEND

ASPHALT PAVEMENT REMOVAL
CONCRETE REMOVAL
ACACIA HABITAT TO BE REMOVED
ICE PLANT HABITAT TO BE REMOVED
GIANT REED HABITAT TO BE REMOVED
ELM HABITAT TO BE REMOVED
MYOPORUM HABITAT TO BE REMOVED
LONG BEAKED FILAREE HABITAT TO BE REMOVED

PLAN
SCALE: 1"=40'

Underground Service Alert of Southern California
Call: TOLL FREE 811
TWO WORKING DAYS BEFORE YOU DIG

IN CONNECTION WITH REVOCABLE PERMIT R-1185-0024: VISTA DEL MAR AT GILLIS STREET, PALACE STREET, STERRY STREET AND BOLT STREET.

IN CONNECTION WITH LADBS PLAN CHECK NO. G12LA00046

REGISTERED PROFESSIONAL ENGINEER DONALD C. WEBER No. C71238 Exp. 06-30-13 CIVIL STATE OF CALIFORNIA 02/05/2013

PLANS PREPARED BY:
AECOM
999 Town and Country Road
Orange CA 92868
Phone: 714.567.2501
Fax: 714.567.2441
www.aecom.com

LA DPW ENGINEERING Design for Life

BUREAU OF ENGINEERING

NO.	REVISIONS:	DATE:	BY:

WORK ACCEPTED | SERIAL NO.

B - PERMITS BR402503

INDEX NO.

BUREAU OF ENGINEERING APPROVAL:
OFFICE: WEST L.A. DISTRICT
CHECKED BY: (PRINTED NAME)
SIGNATURE: DATE:

CITY OF LOS ANGELES DEPARTMENT OF PUBLIC WORKS

VERTICAL CONTROL: BM 17-15135, NGVD29, 1985 ADJ
HORIZONTAL CONTROL: NAD 83 STATE PLANE COORDINATES, ZONE V

SHEET TITLE: DEMOLITION PLAN (2 OF 3)

PROJECT: COASTAL DUNES IMPROVEMENT PROJECT

ADDRESS: 7600 BLOCK OF VISTA DEL MAR PLAYA DEL REY, CA 90293

AECOM
ENGINEER: DONALD C. WEBER, PE
DESIGNED BY: DARCY SULZ
DRAWN BY: DARCY SULZ
CHECKED BY: DONALD C. WEBER, PE
APPROVED BY: JOHN BEHZADI, PE

PROJECT NO.

DRAWING NO. 7

SHEET 7 OF 18 SHEETS

THE CITY OF LOS ANGELES OR ITS OFFICERS OR AGENTS SHALL NOT BE RESPONSIBLE FOR THE ACCURACY OR COMPLETENESS OF ELECTRONIC COPIES OF THIS PLAN SHEET.

REVISION DATES (DESIGN STAGE ONLY)

Sheet Version 4.01 2-2005

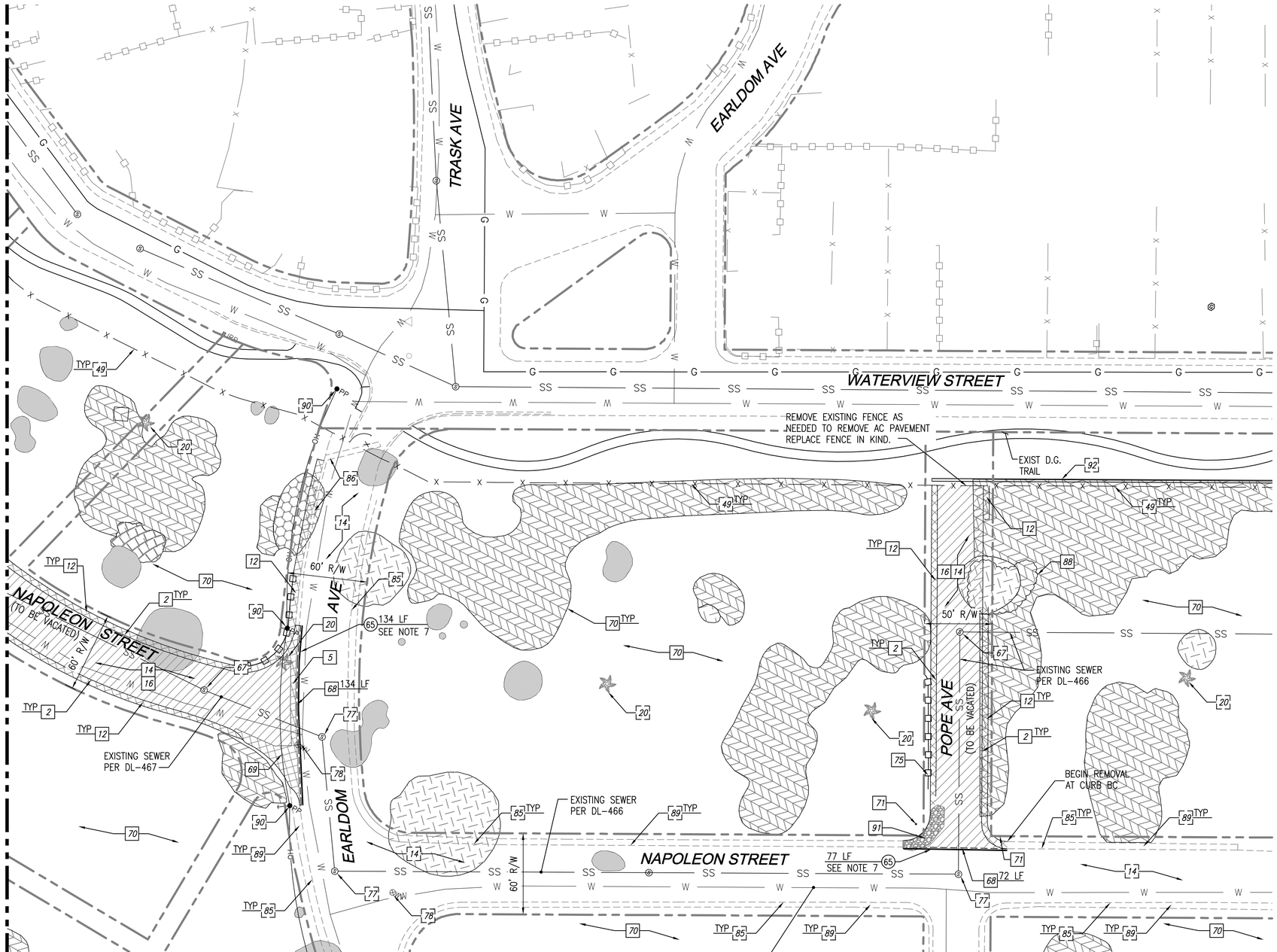

DEMOLITION NOTES & SYMBOLS

- CONSTRUCT
- EXISTING
- REMOVE
- REMODEL EXISTING
- REMOVE & CONSTRUCT
- WORK BY OTHERS

2. TYPE C INTEGRAL CURB & GUTTER. PVMT, b=6", SEE PLAN, c=VARIES
5. CONCRETE LONGITUDINAL GUTTER
12. CONCRETE WALK, t=4"
14. ASPHALT CONCRETE PAVEMENT, t=AS SHOWN
16. UNTREATED BASE MATERIAL, t=AS SHOWN
20. EXISTING TREE
38. RELOCATE AND/OR ADJUST STREET LIGHTING PULL BOX TO GRADE
46. REMOVE AND/OR ADJUST WATER METER AND WATER METER HOUSING/BOX TO GRADE
49. CHAIN LINK FENCE
65. ASPHALT CONCRETE DIKE
66. PLUG EXISTING SEWER LINE ENTERING MANHOLE FROM THE EAST AND BACKFILL WITH ONE-SACK SLURRY PER DETAIL 1 ON SHEET 16.
67. SPOT WELD EXISTING MANHOLE FRAME AND COVER PER DETAIL 2 ON SHEET 16.
68. SAWCUT EXISTING PAVEMENT MIN. 2.0' TO NEAT CLEAN EDGE. LF PER PLAN
69. CONCRETE PAVEMENT AND UNDERLYING BASE MATERIAL
70. NON-NATIVE VEGETATION
71. SIGN POST AND FOUNDATION
72. SIDEWALK RAMP
73. STREET LIGHT AND POLE. SEE NOTE 3.
74. POWER POLE AND GUY WIRES
75. RETAINING WALL AND FOUNDATION
76. FIRE HYDRANT. SEE DETAIL 3 ON SHEET 16
77. PROTECT UTILITY MANHOLE
78. PROTECT WATER VALVE
80. PROTECT FIRE HYDRANT
81. PROTECT GAS VALVE
82. PROTECT STREET LIGHT AND POLE
83. PROTECT CATCH BASIN
85. PROTECT CURB, OR CURB AND GUTTER
86. PROTECT CONCRETE PAVEMENT
88. SHRUB
89. PROTECT EXISTING CONCRETE SIDEWALK
90. PROTECT POWER POLE AND OVERHEAD ELECTRICAL LINES
91. REMOVE GRAVEL PILE
92. CONCRETE V-DITCH

SHEET NOTES:

1. DEMOLITION ACTIVITIES SHOWN ON THIS DRAWING ARE LIMITED TO THOSE AREAS SOUTH OF WATERVIEW STREET. UNLESS NOTED OTHERWISE, ALL UTILITIES LOCATED ALONG WATERVIEW STREET SHALL BE PROTECTED IN PLACE.
2. THE LIMITS OF ALL SIDEWALK THAT IS TO BE REMOVED SHALL BE AS SHOWN ON THIS DRAWING AND SHALL BE REMOVED TO THE NEAREST JOINT LINE.
3. ALL STREET LIGHT FOUNDATIONS, ELECTRICAL PULL BOXES AND ASSOCIATED CONDUITS SHALL BE ABANDONED IN PLACE.
4. THE EXISTENCE AND LOCATION OF EXISTING VEGETATION IS SHOWN TO THE GREATEST EXTENT PRACTICAL ON THIS DRAWING. CONTRACTOR SHALL REMOVE EXISTING VEGETATION AS NEEDED TO PERFORM CONSTRUCTION ACTIVITIES.
5. EXISTING WATER METER BOXES NOT SHOWN ON THIS DRAWING SHALL BE REMOVED AS PART OF THE SIDEWALK REMOVALS.
6. ALL WATER LINES SHOWN ON THIS DRAWING SHALL BE ABANDONED IN PLACE. EXISTING SYSTEM TO BE CUT AND CAPPED BY LADWP. CONTRACTOR TO COORDINATE WITH LADWP AS NEEDED DURING CONSTRUCTION.
7. REFER TO DETAIL 4 ON SHEET 16 FOR TYPICAL AC DIKE INSTALLATION.

LEGEND

- ASPHALT PAVEMENT REMOVAL
- CONCRETE REMOVAL
- ACACIA HABITAT TO BE REMOVED
- ICE PLANT HABITAT TO BE REMOVED
- GIANT REED HABITAT TO BE REMOVED
- ELM HABITAT TO BE REMOVED
- MYOPORUM HABITAT TO BE REMOVED
- LONG BEAKED FILAREE HABITAT TO BE REMOVED

PLAN
SCALE: 1"=40'

Underground Service Alert of Southern California
Call: TOLL FREE 811
TWO WORKING DAYS BEFORE YOU DIG

IN CONNECTION WITH REVOCABLE PERMIT R-1185-0024: VISTA DEL MAR AT GILLIS STREET, PALACE STREET, STERRY STREET AND BOLT STREET.

IN CONNECTION WITH LADBS PLAN CHECK NO. G12LA00046

PLANS PREPARED BY:
AECOM
999 Town and Country Road
Orange CA 92868
Phone: 714.567.2501
Fax: 714.567.2441
www.aecom.com

REGISTERED PROFESSIONAL ENGINEER DONALD C. WEBER No. C71238 Exp. 06-30-13 CIVIL STATE OF CALIFORNIA 02/05/2013

BUREAU OF ENGINEERING
LA DPW ENGINEERING Bureau of Engineering Building for Public Works

No.	REVISIONS:	DATE:	BY:

WORK ACCEPTED
SERIAL NO.
B - PERMITS BR402503
INDEX NO.

BUREAU OF ENGINEERING APPROVAL:
OFFICE: WEST L.A. DISTRICT
CHECKED BY: (PRINTED NAME)
SIGNATURE: DATE:

CITY OF LOS ANGELES DEPARTMENT OF PUBLIC WORKS

AECOM
DESIGN GROUP
ENGINEER: DONALD C. WEBER, PE
DESIGNED BY: DARCY SULZ
DRAWN BY: DARCY SULZ
CHECKED BY: DONALD C. WEBER, PE
APPROVED BY: JOHN BEHZADI, PE

VERTICAL CONTROL: BM 17-15135, NGVD29, 1985 ADJ
HORIZONTAL CONTROL: NAD 83 STATE PLANE COORDINATES, ZONE V

SHEET TITLE: DEMOLITION PLAN (3 OF 3)
PROJECT: COASTAL DUNES IMPROVEMENT PROJECT
ADDRESS: 7600 BLOCK OF VISTA DEL MAR PLAYA DEL REY, CA 90293

PROJECT NO.
DRAWING NO. 8
SHEET 8 OF 18 SHEETS

THE CITY OF LOS ANGELES OR ITS OFFICERS OR AGENTS SHALL NOT BE RESPONSIBLE FOR THE ACCURACY OR COMPLETENESS OF ELECTRONIC COPIES OF THIS PLAN SHEET.

REVISION DATES (DESIGN STAGE ONLY)

Sheet Version 4.01 2-2005

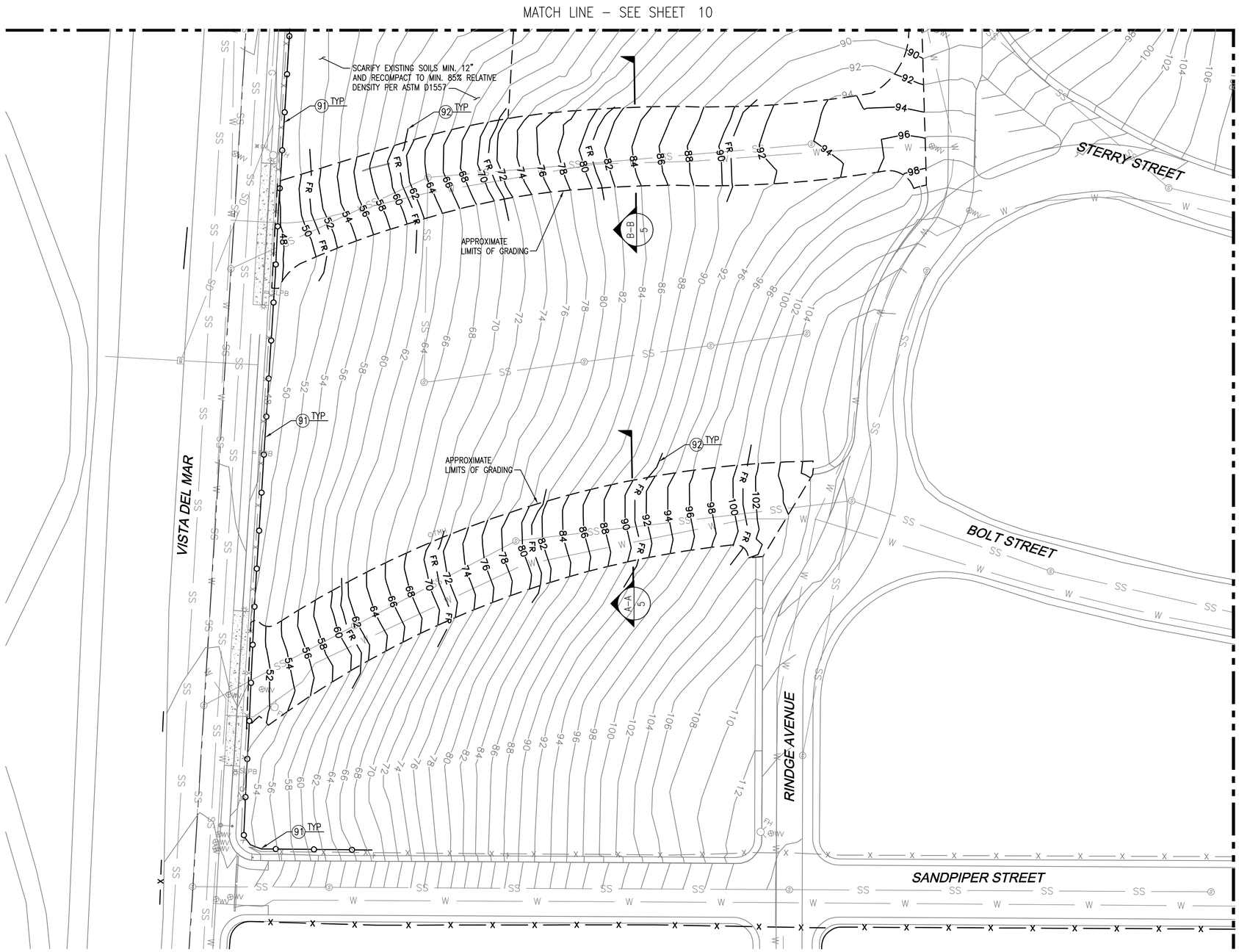

GENERAL NOTES

1. CONSTRUCTION ACTIVITIES ARE LIMITED TO THOSE AREAS EAST OF VISTA DEL MAR WITH THE EXCEPTION OF THE PAVEMENT CONSTRUCTION AT THE STREET INTERSECTION(S).
2. UNLESS NOTED OTHERWISE, ALL UTILITIES SHOWN ON THIS DRAWING SHALL BE ABANDONED IN PLACE.

CONSTRUCTION NOTES & SYMBOLS

- CONSTRUCT
- EXISTING
- REMOVE
- REMODEL EXISTING
- REMOVE & CONSTRUCT
- WORK BY OTHERS

91. INSTALL SILT FENCE PER DETAIL 1 ON SHEET 17

92. INSTALL FIBER ROLL/STRAW WADDLE PER DETAIL 3 ON SHEET 17

LEGEND

- 90 — PROPOSED CONTOURS
- 90 — EXISTING CONTOURS
- GRADING LIMITS
- SILT FENCE
- FR — FIBER ROLL / STRAW WADDLE

PLAN
SCALE: 1"=40'

Underground Service Alert of Southern California
Call: TOLL FREE 811
TWO WORKING DAYS BEFORE YOU DIG

IN CONNECTION WITH REVOCABLE PERMIT R-1185-0024: VISTA DEL MAR AT GILLIS STREET, PALACE STREET, STERRY STREET AND BOLT STREET.

IN CONNECTION WITH LADBS PLAN CHECK NO. G12LA00046

PLANS PREPARED BY:
AECOM
999 Town and Country Road
Orange CA 92868
Phone: 714.567.2501
Fax: 714.567.2441
www.aecom.com

REGISTERED PROFESSIONAL ENGINEER DONALD C. WEBER No. C71238 Exp. 06-30-15 CIVIL STATE OF CALIFORNIA 02/05/2013

LA DPW ENGINEERING Design for Public Benefit

BUREAU OF ENGINEERING

NO.	REVISIONS:	DATE:	BY:

WORK ACCEPTED | SERIAL NO.

B - PERMITS BR402503

INDEX NO.

BUREAU OF ENGINEERING APPROVAL:
OFFICE: WEST L.A. DISTRICT
CHECKED BY: (PRINTED NAME)
SIGNATURE: DATE:

CITY OF LOS ANGELES DEPARTMENT OF PUBLIC WORKS

AECOM
DESIGN GROUP

ENGINEER: DONALD C. WEBER, PE
DESIGNED BY: DARCY SULZ
DRAWN BY: DARCY SULZ
CHECKED BY: DONALD C. WEBER, PE
APPROVED BY: JOHN BEHZADI, PE

VERTICAL CONTROL: BM 17-1535, NGVD29, 1985 ADJ
HORIZONTAL CONTROL: NAD 83 STATE PLANE COORDINATES, ZONE V

SHEET TITLE: GRADING PLAN (1 OF 3)

PROJECT: COASTAL DUNES IMPROVEMENT PROJECT

ADDRESS: 7600 BLOCK OF VISTA DEL MAR PLAYA DEL REY, CA 90293

PROJECT NO.

DRAWING NO. 9

SHEET 9 OF 18 SHEETS

THE CITY OF LOS ANGELES OR ITS OFFICERS OR AGENTS SHALL NOT BE RESPONSIBLE FOR THE ACCURACY OR COMPLETENESS OF ELECTRONIC COPIES OF THIS PLAN SHEET.

REVISION DATES (DESIGN STAGE ONLY)

Sheet Version 4.01 2-2005

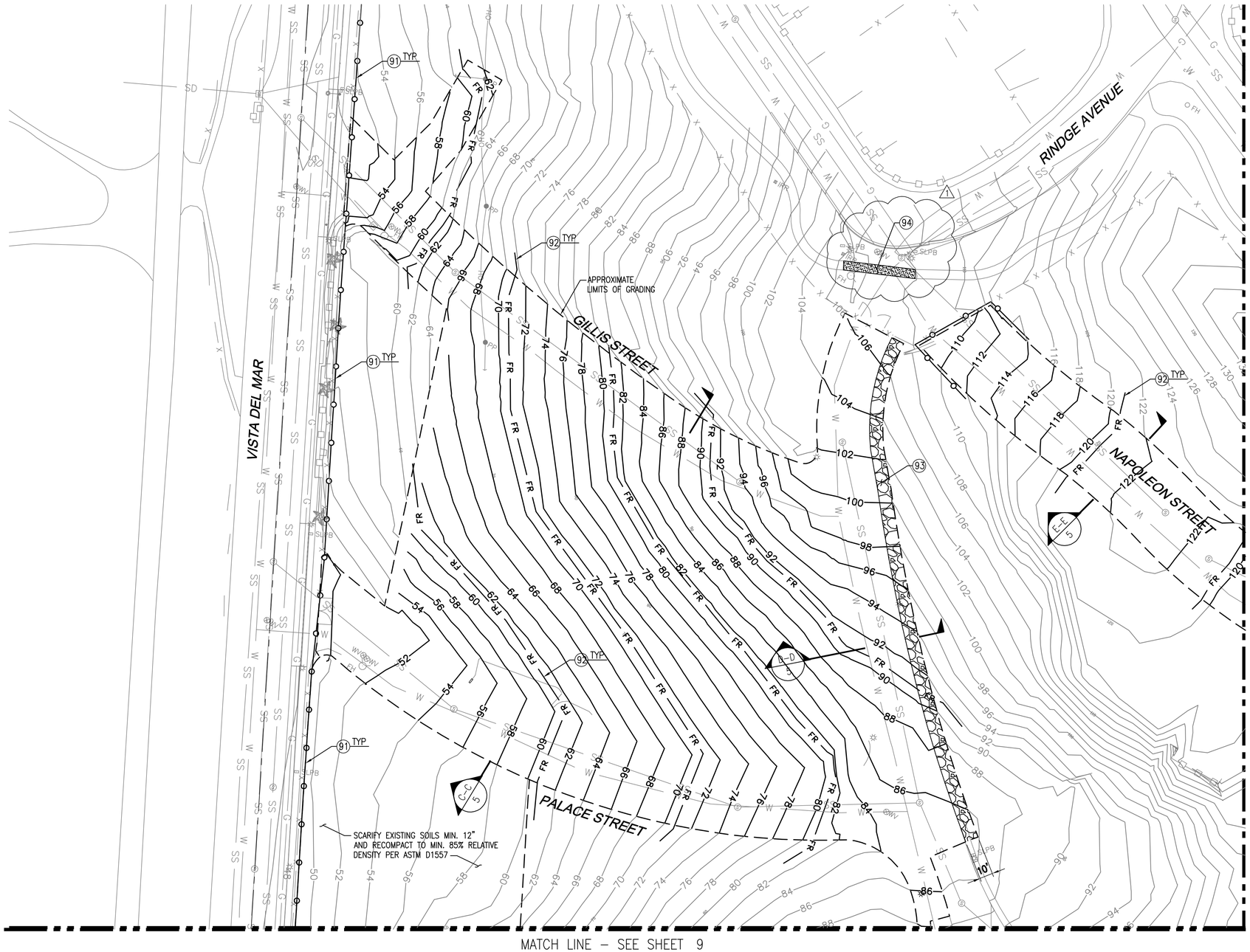

GENERAL NOTES

1. CONSTRUCTION ACTIVITIES ARE LIMITED TO THOSE AREAS EAST OF VISTA DEL MAR WITH THE EXCEPTION OF THE PAVEMENT CONSTRUCTION AT THE STREET INTERSECTION(S).
2. UNLESS NOTED OTHERWISE, ALL UTILITIES SHOWN ON THIS DRAWING SHALL BE ABANDONED IN PLACE.

CONSTRUCTION NOTES & SYMBOLS

CONSTRUCT
EXISTING
REMOVE
REMODEL EXISTING
REMOVE & CONSTRUCT
WORK BY OTHERS

91. INSTALL SILT FENCE PER DETAIL 1 ON SHEET 17
92. INSTALL FIBER ROLL/STRAW WADDLE PER DETAIL 3 ON SHEET 17
93. INSTALL 8" THICK COMPACTED BASE MATERIAL AT 90% RELATIVE DENSITY PER ASTM D1557. MATERIAL SHALL BE RE-USED FROM ROADWAY EXCAVATIONS.
94. INSTALL 6" THICK DECOMPOSED GRANITE COMPACTED AT 90% RELATIVE DENSITY PER ASTM D1557. MATERIAL TO MATCH EXISTING TRAIL ALONG RINDGE AVENUE.

LEGEND

—90—	PROPOSED CONTOURS
—90—	EXISTING CONTOURS
— — —	GRADING LIMITS
—o—o—	SILT FENCE
— FR —	FIBER ROLL / STRAW WADDLE

PLAN

SCALE: 1"=40'

Underground Service Alert of Southern California
Call: TOLL FREE 811
TWO WORKING DAYS BEFORE YOU DIG

IN CONNECTION WITH REVOCABLE PERMIT R-1185-0024: VISTA DEL MAR AT GILLIS STREET, PALACE STREET, STERRY STREET AND BOLT STREET.

IN CONNECTION WITH LADBS PLAN CHECK NO. G12LA00046

PLANS PREPARED BY:
AECOM
999 Town and Country Road
Orange CA 92868
Phone: 714.567.2501
Fax: 714.567.2441
www.aecom.com

REGISTERED PROFESSIONAL ENGINEER DONALD C. WEBER No. C71238 Exp. 06-30-13 CIVIL STATE OF CALIFORNIA 02/05/2013

CITY OF LOS ANGELES — DEPARTMENT OF PUBLIC WORKS — BUREAU OF ENGINEERING

LA DPW ENGINEERING "Quality Is Our Goal" "Dedicated To The Public"

NO.	REVISIONS:	DATE:	BY:
1	ADDED DECOMPOSED GRANITE TRAIL		

WORK ACCEPTED — SERIAL NO.

B - PERMITS BR402503

INDEX NO.

BUREAU OF ENGINEERING APPROVAL: OFFICE: WEST L.A. DISTRICT CHECKED BY: (PRINTED NAME) SIGNATURE: DATE:

AECOM
ENGINEER: DONALD C. WEBER, PE
DESIGN GROUP
DESIGNED BY: DARCY SULZ
DRAWN BY: DARCY SULZ
CHECKED BY: DONALD C. WEBER, PE
APPROVED BY: JOHN BEHZADI, PE

VERTICAL CONTROL: BM 17-15135, NGVD29, 1985 ADJ
HORIZONTAL CONTROL: NAD 83 STATE PLANE COORDINATES, ZONE V

SHEET TITLE: GRADING PLAN (2 OF 3)

PROJECT: COASTAL DUNES IMPROVEMENT PROJECT

ADDRESS: 7600 BLOCK OF VISTA DEL MAR PLAYA DEL REY, CA 90293

PROJECT NO.

DRAWING NO. 10

SHEET 10 OF 18 SHEETS

THE CITY OF LOS ANGELES OR ITS OFFICERS OR AGENTS SHALL NOT BE RESPONSIBLE FOR THE ACCURACY OR COMPLETENESS OF ELECTRONIC COPIES OF THIS PLAN SHEET.

REVISION DATES (DESIGN STAGE ONLY)

Sheet Version 4.01 2-2005

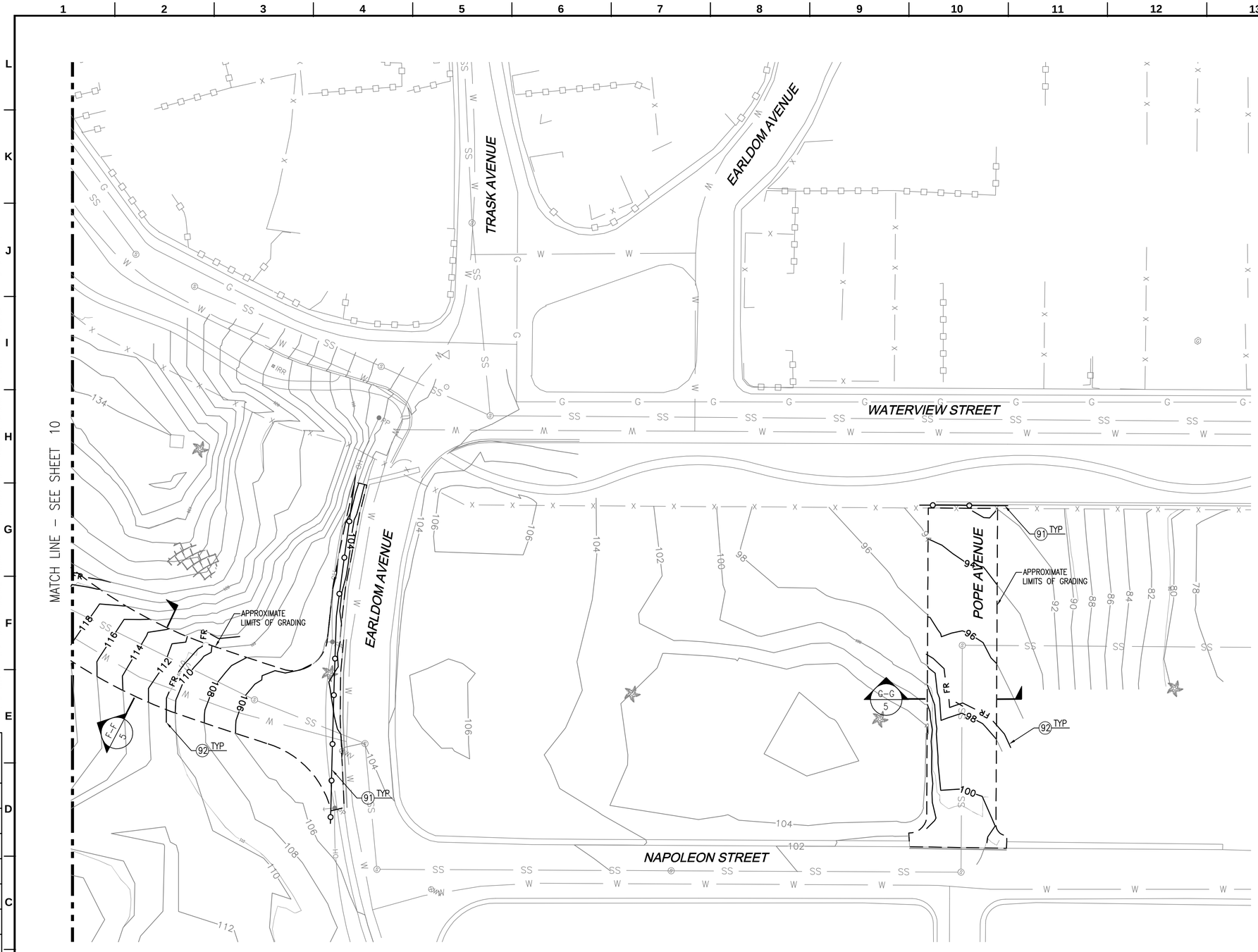

GENERAL NOTES

1. CONSTRUCTION ACTIVITIES ARE LIMITED TO THOSE AREAS EAST OF VISTA DEL MAR WITH THE EXCEPTION OF THE PAVEMENT CONSTRUCTION AT THE STREET INTERSECTION(S).
2. UNLESS NOTED OTHERWISE, ALL UTILITIES SHOWN ON THIS DRAWING SHALL BE ABANDONED IN PLACE.

CONSTRUCTION NOTES & SYMBOLS

- CONSTRUCT
- EXISTING
- REMOVE
- REMODEL EXISTING
- REMOVE & CONSTRUCT
- WORK BY OTHERS

91. INSTALL SILT FENCE PER DETAIL 1 ON SHEET 17

92. INSTALL FIBER ROLL/STRAW WADDLE PER DETAIL 3 ON SHEET 17

LEGEND

- 90 — PROPOSED CONTOURS
- 90 — EXISTING CONTOURS
- GRADING LIMITS
- SILT FENCE
- FR — FIBER ROLL / STRAW WADDLE

PLAN

SCALE: 1"=40'

Underground Service Alert of Southern California
Call: TOLL FREE 811
TWO WORKING DAYS BEFORE YOU DIG

IN CONNECTION WITH REVOCABLE PERMIT R-1185-0024: VISTA DEL MAR AT GILLIS STREET, PALACE STREET, STERRY STREET AND BOLT STREET.

IN CONNECTION WITH LADBS PLAN CHECK NO. G12LA00046

PLANS PREPARED BY:
AECOM
999 Town and Country Road
Orange CA 92868
Phone: 714.567.2501
Fax: 714.567.2441
www.aecom.com

REGISTERED PROFESSIONAL ENGINEER DONALD C. WEBER No. C71238 CIVIL STATE OF CALIFORNIA 02/05/2013

LA DPW ENGINEERING Excellence in Service Dedication for Future

BUREAU OF ENGINEERING

NO.	REVISIONS:	DATE:	BY:

WORK ACCEPTED | SERIAL NO.

B - PERMITS BR402503

INDEX NO.

BUREAU OF ENGINEERING APPROVAL:
OFFICE: WEST L.A. DISTRICT
CHECKED BY: (PRINTED NAME)
SIGNATURE: DATE:

CITY OF LOS ANGELES DEPARTMENT OF PUBLIC WORKS

AECOM
DESIGN GROUP
ENGINEER: DONALD C. WEBER, PE
DESIGNED BY: DARCY SULZ
DRAWN BY: DARCY SULZ
CHECKED BY: DONALD C. WEBER, PE
APPROVED BY: JOHN BEHZADI, PE

VERTICAL CONTROL: BM 17-15135, NGVD29, 1985 ADJ
HORIZONTAL CONTROL: NAD 83 STATE PLANE COORDINATES, ZONE V

SHEET TITLE: GRADING PLAN (3 OF 3)

PROJECT: COASTAL DUNES IMPROVEMENT PROJECT

ADDRESS: 7600 BLOCK OF VISTA DEL MAR PLAYA DEL REY, CA 90293

PROJECT NO.

DRAWING NO. 11

SHEET 11 OF 18 SHEETS

THE CITY OF LOS ANGELES OR ITS OFFICERS OR AGENTS SHALL NOT BE RESPONSIBLE FOR THE ACCURACY OR COMPLETENESS OF ELECTRONIC COPIES OF THIS PLAN SHEET.

REVISION DATES (DESIGN STAGE ONLY)

Sheet Version 4.01 2-2005

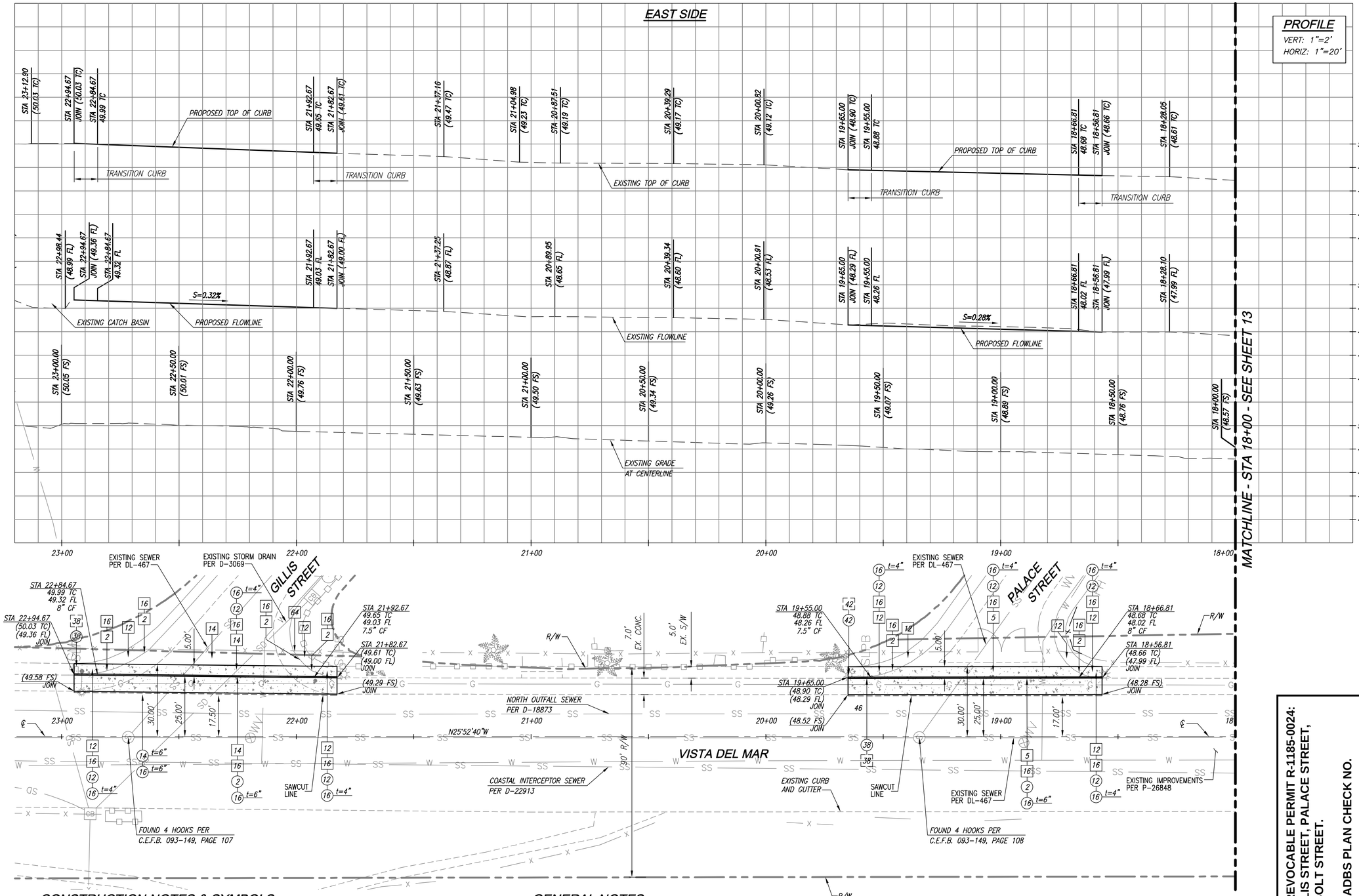

CONSTRUCTION NOTES & SYMBOLS

- CONSTRUCT
- EXISTING
- REMOVE
- REMODEL EXISTING
- REMOVE & CONSTRUCT
- WORK BY OTHERS

2. TYPE C INTEGRAL CURB & GUTTER, b=6", SEE PLAN, c=VARIES
5. CONCRETE LONGITUDINAL GUTTER
12. CONCRETE WALK, t=4"
14. ASPHALT CONCRETE PAVEMENT, t=AS SHOWN
16. UNTREATED BASE MATERIAL, t=AS SHOWN
38. RELOCATE AND/OR ADJUST STREET LIGHTING PULL BOX TO GRADE
42. RELOCATE AND/OR ADJUST ELECTROLIER/STREET LIGHT TO GRADE
64. REMOVE FENCE POST

GENERAL NOTES

1. THE LIMITS OF CONCRETE REMOVAL SHOWN HEREON ARE THE MINIMUM REQUIRED TO COMPLETE THE WORK. THE CONTRACTOR SHALL REMOVE ALL CONCRETE TO THE NEAREST JOINT.
2. APPLY TACK COAT IN ACCORDANCE WITH THE PROJECT SPECIFICATIONS AT ALL VERTICAL FACES WHERE AC PAVEMENT ADJOINS PCC PAVEMENT.
3. SEE SHEET 7 FOR REMOVALS ON GILLIS STREET AND PALACE STREET.

Underground Service Alert of Southern California
Call: TOLL FREE 811
TWO WORKING DAYS BEFORE YOU DIG

PLAN
SCALE: 1"=20'

IN CONNECTION WITH REVOCABLE PERMIT R-1185-0024: VISTA DEL MAR AT GILLIS STREET, PALACE STREET, STERRY STREET AND BOLT STREET.

IN CONNECTION WITH LADBS PLAN CHECK NO. G12LA00046

REGISTERED PROFESSIONAL ENGINEER — DONALD C. WEBER — No. C71238 — CIVIL — STATE OF CALIFORNIA — 02/05/2013

PLANS PREPARED BY:
AECOM
999 Town and Country Road
Orange CA 92868
Phone: 714.567.2501
Fax: 714.567.2441
www.aecom.com

CITY OF LOS ANGELES — DEPARTMENT OF PUBLIC WORKS — BUREAU OF ENGINEERING

LA DPW ENGINEERING Design for Public Benefit

AECOM
DESIGN GROUP
ENGINEER: DONALD C. WEBER, PE
DESIGNED BY: DARCY SULZ
DRAWN BY: DARCY SULZ
CHECKED BY: DONALD C. WEBER, PE
APPROVED BY: JOHN BEHZADI, PE

NO. | REVISIONS: | DATE: | BY:
WORK ACCEPTED | SERIAL NO.

B - PERMITS
BR402503

INDEX NO.

BUREAU OF ENGINEERING APPROVAL:
OFFICE: WEST L.A. DISTRICT
CHECKED BY: (PRINTED NAME)
SIGNATURE: | DATE:

VERTICAL CONTROL: BM 17-15135, NGVD29, 1985 ADJ
HORIZONTAL CONTROL: NAD 83 STATE PLANE COORDINATES, ZONE V

SHEET TITLE: IMPROVEMENT PLAN (1 OF 4)

PROJECT: COASTAL DUNES IMPROVEMENT PROJECT

ADDRESS: 7600 BLOCK OF VISTA DEL MAR
PLAYA DEL REY, CA 90293

PROJECT NO.

DRAWING NO. 12

SHEET 12 OF 18 SHEETS

THE CITY OF LOS ANGELES OR ITS OFFICERS OR AGENTS SHALL NOT BE RESPONSIBLE FOR THE ACCURACY OR COMPLETENESS OF ELECTRONIC COPIES OF THIS PLAN SHEET.

REVISION DATES (DESIGN STAGE ONLY)

Sheet Version 4.01 2-2005

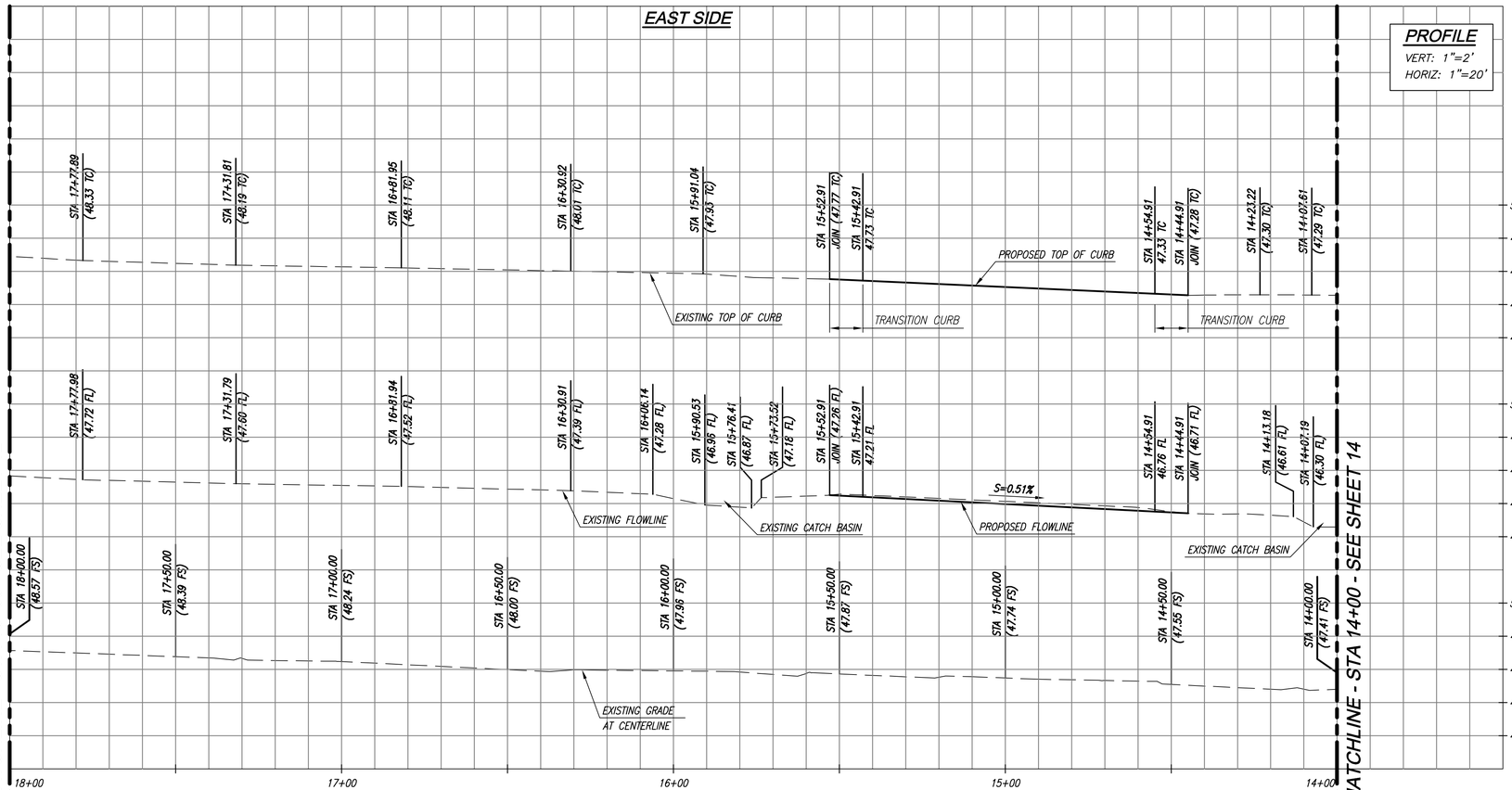

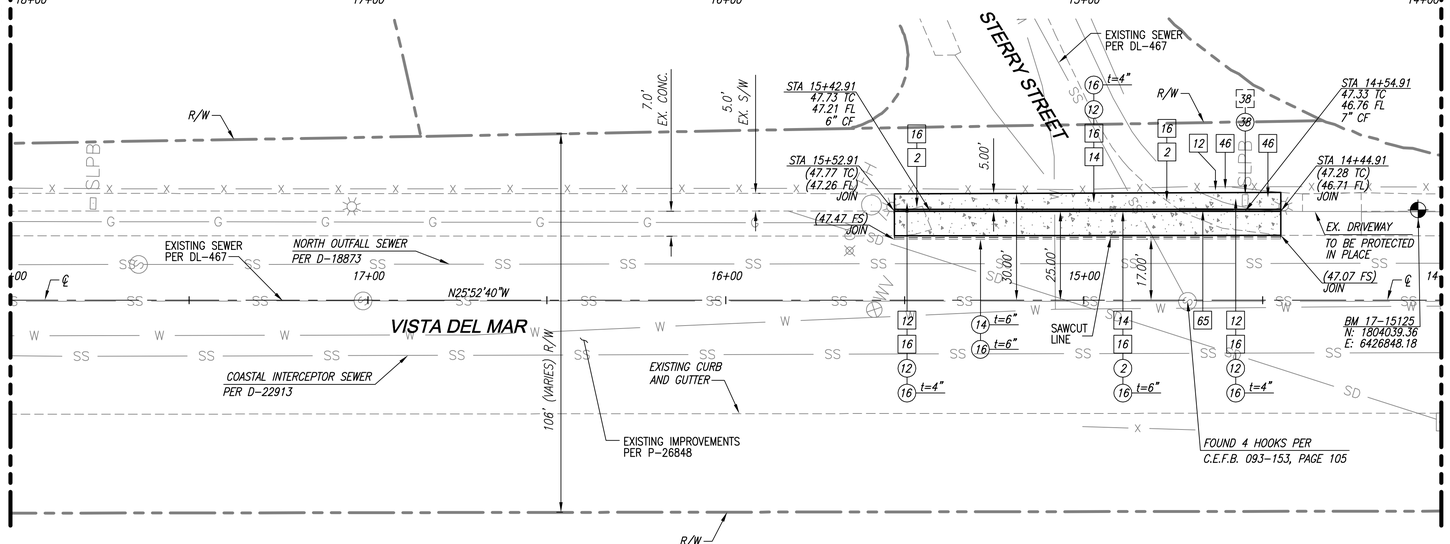

PLAN
SCALE: 1"=20'

GENERAL NOTES

1. THE LIMITS OF CONCRETE REMOVAL SHOWN HEREON ARE THE MINIMUM REQUIRED TO COMPLETE THE WORK. THE CONTRACTOR SHALL REMOVE ALL CONCRETE TO THE NEAREST JOINT.
2. APPLY TACK COAT IN ACCORDANCE WITH THE PROJECT SPECIFICATIONS AT ALL VERTICAL FACES WHERE AC PAVEMENT ADJOINS PCC PAVEMENT.
3. SEE SHEET 6 FOR REMOVALS ON STERRY STREET.

CONSTRUCTION NOTES & SYMBOLS

- CONSTRUCT
- EXISTING
- REMOVE
- REMODEL EXISTING
- REMOVE & CONSTRUCT
- WORK BY OTHERS

2. TYPE C INTEGRAL CURB & GUTTER, b=6", SEE PLAN, c=VARIES
12. CONCRETE WALK, t=4"
14. ASPHALT CONCRETE PAVEMENT, t=AS SHOWN
16. UNTREATED BASE MATERIAL, t=AS SHOWN
38. RELOCATE AND/OR ADJUST STREET LIGHTING PULL BOX TO GRADE
46. REMOVE AND/OR ADJUST WATER METER AND WATER METER HOUSING/BOX TO GRADE
65. ASPHALT CONCRETE DIKE

Underground Service Alert of Southern California
Call: TOLL FREE 811
TWO WORKING DAYS BEFORE YOU DIG

IN CONNECTION WITH REVOCABLE PERMIT R-1185-0024: VISTA DEL MAR AT GILLIS STREET, PALACE STREET, STERRY STREET AND BOLT STREET.

IN CONNECTION WITH LADBS PLAN CHECK NO. G12LA00046

PLANS PREPARED BY:
AECOM
999 Town and Country Road
Orange CA 92868
Phone: 714.567.2501
Fax: 714.567.2441
www.aecom.com

REGISTERED PROFESSIONAL ENGINEER DONALD C. WEBER No. C71238 Exp. 12-31-13 CIVIL STATE OF CALIFORNIA 02/05/2013

CITY OF LOS ANGELES • DEPARTMENT OF PUBLIC WORKS • BUREAU OF ENGINEERING

LA DPW ENGINEERING Design for Public Benefit

ENGINEER:	AECOM DESIGN GROUP
DESIGNED BY:	DONALD C. WEBER, PE
DRAWN BY:	DARCY SULZ
CHECKED BY:	DARCY SULZ
APPROVED BY:	DONALD C. WEBER, PE
	JOHN BEHZADI, PE

NO. | REVISIONS: | DATE: | BY:

WORK ACCEPTED | SERIAL NO.

B - PERMITS
BR402503

INDEX NO.

BUREAU OF ENGINEERING APPROVAL
OFFICE: WEST L.A. DISTRICT
CHECKED BY: (PRINTED NAME)
SIGNATURE: DATE:

VERTICAL CONTROL: BM 17-15135, NGVD29, 1985 ADJ
HORIZONTAL CONTROL: NAD 83 STATE PLANE COORDINATES, ZONE V

SHEET TITLE: IMPROVEMENT PLAN (2 OF 4)

PROJECT: COASTAL DUNES IMPROVEMENT PROJECT

ADDRESS: 7600 BLOCK OF VISTA DEL MAR
PLAYA DEL REY, CA 90293

PROJECT NO.

DRAWING NO. 13

SHEET 13 OF 18 SHEETS

THE CITY OF LOS ANGELES OR ITS OFFICERS OR AGENTS SHALL NOT BE RESPONSIBLE FOR THE ACCURACY OR COMPLETENESS OF ELECTRONIC COPIES OF THIS PLAN SHEET.

REVISION DATES (DESIGN STAGE ONLY)

Sheet Version 4.01 2-2005

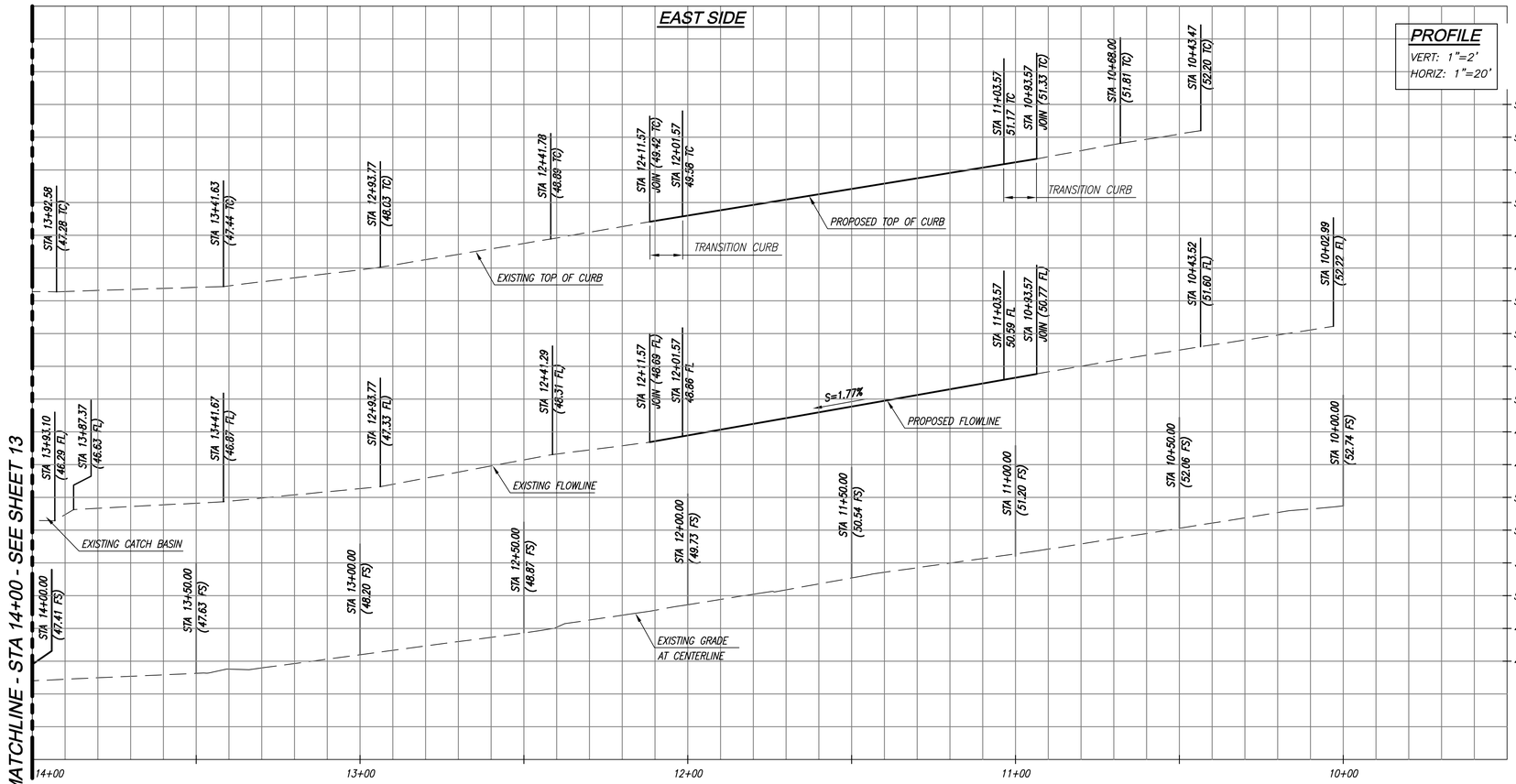

GENERAL NOTES

1. THE LIMITS OF CONCRETE REMOVAL SHOWN HEREON ARE THE MINIMUM REQUIRED TO COMPLETE THE WORK. THE CONTRACTOR SHALL REMOVE ALL CONCRETE TO THE NEAREST JOINT.
2. APPLY TACK COAT IN ACCORDANCE WITH THE PROJECT SPECIFICATIONS AT ALL VERTICAL FACES WHERE AC PAVEMENT ADJOINS PCC PAVEMENT.
3. SEE SHEET 6 FOR REMOVALS ON BOLT STREET.

CONSTRUCTION NOTES & SYMBOLS

CONSTRUCT
EXISTING
REMOVE
REMODEL EXISTING
REMOVE & CONSTRUCT
WORK BY OTHERS

2. TYPE C INTEGRAL CURB & GUTTER, b=6", SEE PLAN, c=VARIES
5. CONCRETE LONGITUDINAL GUTTER
12. CONCRETE WALK, t=4"
16. UNTREATED BASE MATERIAL, t=AS SHOWN
49. ADJUST WATER VALVE TO GRADE
65. ASPHALT CONCRETE DIKE

LINE DATA		
MARK	BEARING	DISTANCE
1	N64°07'20"E	25.23'
2	N25°52'40"W	43.86'

Underground Service Alert of Southern California
Call: TOLL FREE 811
TWO WORKING DAYS BEFORE YOU DIG

IN CONNECTION WITH REVOCABLE PERMIT R-1185-0024: VISTA DEL MAR AT GILLIS STREET, PALACE STREET, STERRY STREET AND BOLT STREET.

IN CONNECTION WITH LADBS PLAN CHECK NO. G12LA00046

REGISTERED PROFESSIONAL ENGINEER — DONALD C. WEBER — No. C71238 — Exp. 12-31-13 — CIVIL — STATE OF CALIFORNIA — 02/05/2013

PLANS PREPARED BY:
AECOM
999 Town and Country Road
Orange CA 92868
Phone: 714.567.2501
Fax: 714.567.2441
www.aecom.com

THE CITY OF LOS ANGELES OR ITS OFFICERS OR AGENTS SHALL NOT BE RESPONSIBLE FOR THE ACCURACY OR COMPLETENESS OF ELECTRONIC COPIES OF THIS PLAN SHEET.

REVISION DATES (DESIGN STAGE ONLY)

Sheet Version 4.01 2-2005

CITY OF LOS ANGELES
DEPARTMENT OF PUBLIC WORKS
BUREAU OF ENGINEERING

LA DPW ENGINEERING Design for Public Benefit

AECOM
DESIGN GROUP
ENGINEER: DONALD C. WEBER, PE
DESIGNED BY: DARCY SULZ
DRAWN BY: DARCY SULZ
CHECKED BY: DONALD C. WEBER, PE
APPROVED BY: JOHN BEHZADI, PE

VERTICAL CONTROL: BM 17-15135, NGVD29, 1985 ADJ
HORIZONTAL CONTROL: NAD 83 STATE PLANE COORDINATES, ZONE V

SHEET TITLE: IMPROVEMENT PLAN (3 OF 4)
PROJECT: COASTAL DUNES IMPROVEMENT PROJECT
ADDRESS: 7600 BLOCK OF VISTA DEL MAR PLAYA DEL REY, CA 90293

NO.	REVISIONS:	DATE:	BY:

WORK ACCEPTED
SERIAL NO.

BUREAU OF ENGINEERING APPROVAL:
OFFICE: WEST L.A. DISTRICT
CHECKED BY: (PRINTED NAME)
SIGNATURE: DATE:

B - PERMITS
BR402503

INDEX NO.

PROJECT NO.
DRAWING NO. 14
SHEET 14 OF 18 SHEETS

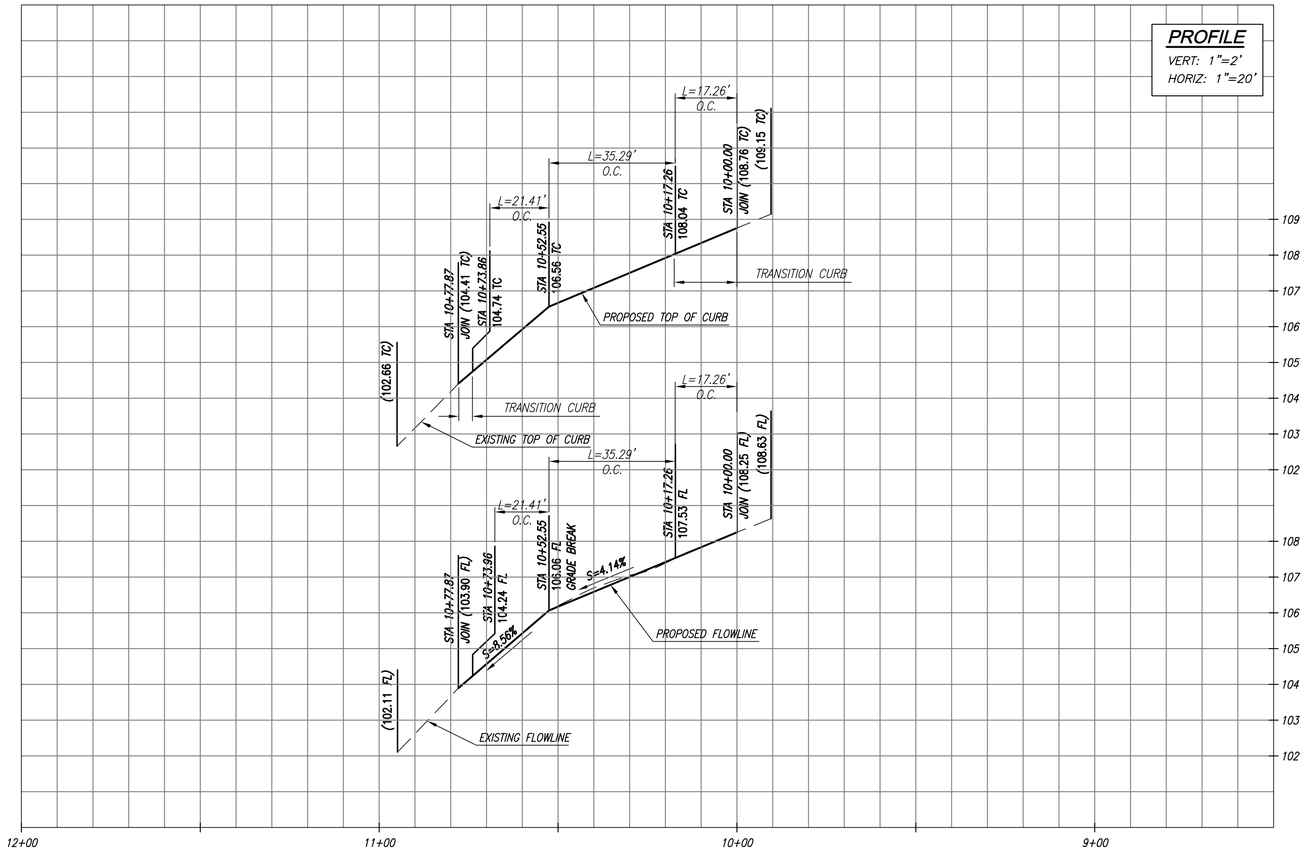

GENERAL NOTES

1. THE LIMITS OF CONCRETE REMOVAL SHOWN HEREON ARE THE MINIMUM REQUIRED TO COMPLETE THE WORK. THE CONTRACTOR SHALL REMOVE ALL CONCRETE TO THE NEAREST JOINT.
2. APPLY TACK COAT IN ACCORDANCE WITH THE PROJECT SPECIFICATIONS AT ALL VERTICAL FACES WHERE AC PAVEMENT ADJOINS PCC PAVEMENT.
3. SEE SHEET 7 FOR REMOVALS ON RINDGE AVENUE.

CONSTRUCTION NOTES & SYMBOLS

- CONSTRUCT
- EXISTING
- REMOVE
- REMODEL EXISTING
- REMOVE & CONSTRUCT
- WORK BY OTHERS

2. TYPE C INTEGRAL CURB & GUTTER, b=6", SEE PLAN, a=VARIFY IN FIELD
14. ASPHALT CONCRETE PAVEMENT, t=AS SHOWN
16. UNTREATED BASE MATERIAL, t=AS SHOWN

LEGEND:

NEW AC PAVEMENT (CLASS C-2, PG 64-10)

CURVE DATA				
MARK	R	Δ	L	T
1	50.00'	64°51'45"	56.60'	31.77'

LINE DATA		
MARK	L	BEARING
2	17.26'	N 52°11'30" E
3	4.01'	S 62°56'45" E

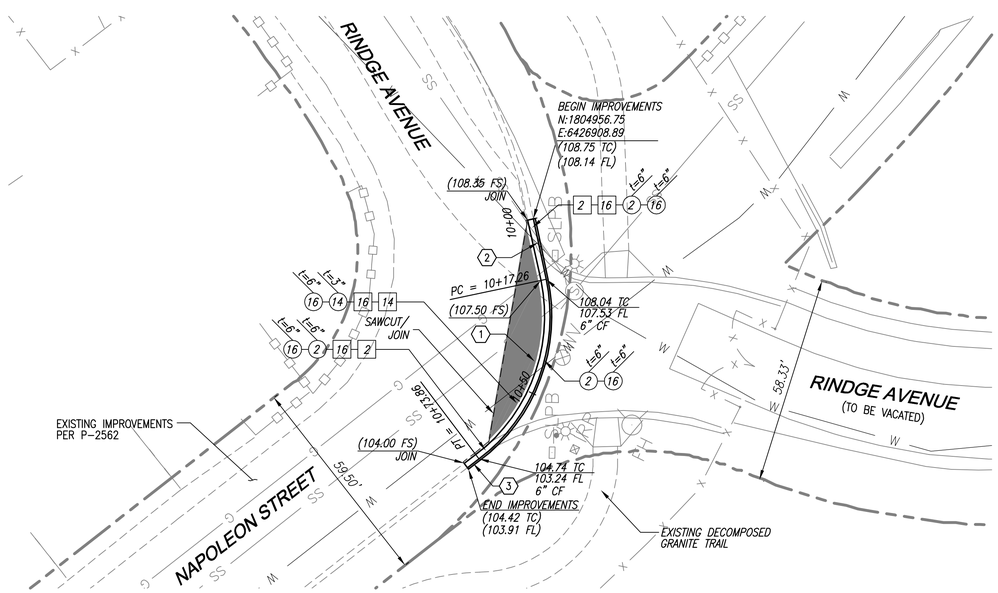

PLAN
SCALE: 1"=20'

Underground Service Alert of Southern California
Call: TOLL FREE 811
TWO WORKING DAYS BEFORE YOU DIG

IN CONNECTION WITH REVOCABLE PERMIT R-1185-0024: VISTA DEL MAR AT GILLIS STREET, PALACE STREET, STERRY STREET AND BOLT STREET.

IN CONNECTION WITH LADBS PLAN CHECK NO. G12LA00046

PLANS PREPARED BY:
AECOM
999 Town and Country Road
Orange CA 92868
Phone: 714.567.2501
Fax: 714.567.2441
www.aecom.com

REGISTERED PROFESSIONAL ENGINEER DONALD C. WEBER No. C71238 Exp. 12-31-13 CIVIL STATE OF CALIFORNIA 02/05/2013

CITY OF LOS ANGELES DEPARTMENT OF PUBLIC WORKS BUREAU OF ENGINEERING

LA DPW ENGINEERING Design for Public Benefit

NO.	REVISIONS:	DATE:	BY:

WORK ACCEPTED | SERIAL NO.

B - PERMITS BR402503

INDEX NO.

BUREAU OF ENGINEERING APPROVAL: OFFICE: WEST L.A. DISTRICT CHECKED BY: (PRINTED NAME) SIGNATURE: DATE:

AECOM DESIGN GROUP

ENGINEER: DONALD C. WEBER, PE
DESIGNED BY: DARCY SULZ
DRAWN BY: DARCY SULZ
CHECKED BY: DONALD C. WEBER, PE
APPROVED BY: JOHN BEHZADI, PE

VERTICAL CONTROL: BM 17-15135, NGVD29, 1985 ADJ
HORIZONTAL CONTROL: NAD 83 STATE PLANE COORDINATES, ZONE V

SHEET TITLE: IMPROVEMENT PLAN (4 OF 4)

PROJECT: COASTAL DUNES IMPROVEMENT PROJECT

ADDRESS: 7600 BLOCK OF VISTA DEL MAR PLAYA DEL REY, CA 90293

PROJECT NO.

DRAWING NO. 15

SHEET 15 OF 18 SHEETS

THE CITY OF LOS ANGELES OR ITS OFFICERS OR AGENTS SHALL NOT BE RESPONSIBLE FOR THE ACCURACY OR COMPLETENESS OF ELECTRONIC COPIES OF THIS PLAN SHEET.

REVISION DATES (DESIGN STAGE ONLY)

Sheet Version 4.01 2-2005

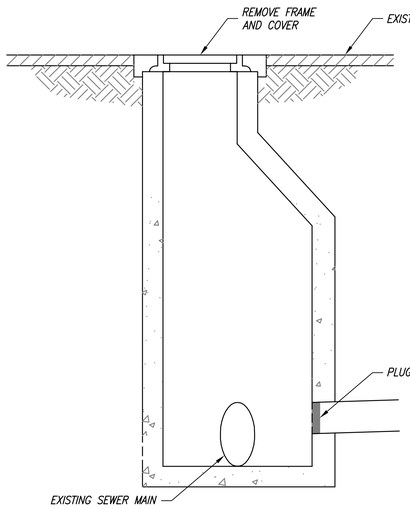

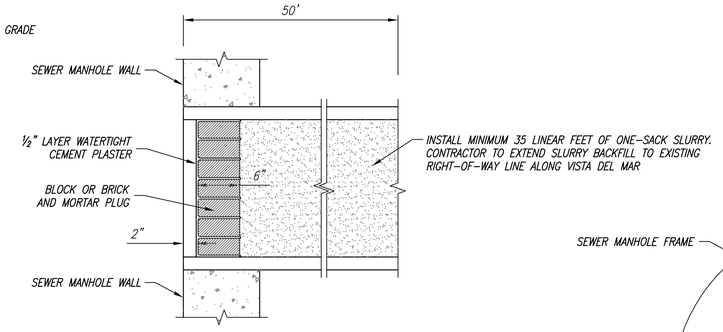

PLUG DETAIL

NOTE:

1. ONLY THOSE PIPES THAT ENTER THE EXISTING MANHOLE IN VISTA DEL MAR FROM THE EAST SHALL BE PLUGGED. ALL PIPES RUNNING IN A NORTH-SOUTH DIRECTION SHALL BE PROTECTED IN PLACE.

1 CB501 SEWER MAIN ABANDONMENT DETAIL
SCALE: NOT TO SCALE

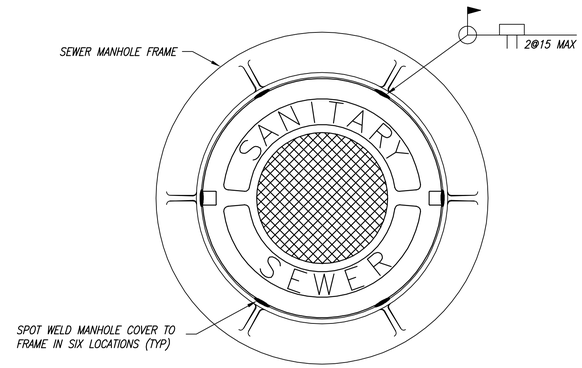

2 CB501 MANHOLE FRAME WELD DETAIL
SCALE: NOT TO SCALE

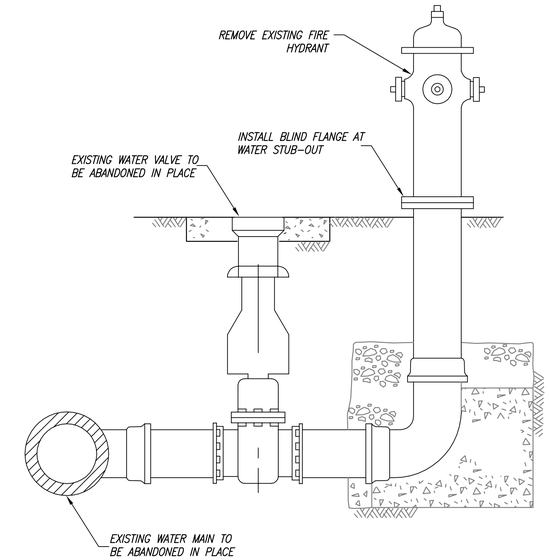

NOTE:

INSPECTION OF FIRE HYDRANT REMOVAL TO BE PERFORMED BY LAWA.

3 CB501 FIRE HYDRANT REMOVAL DETAIL
SCALE: NOT TO SCALE

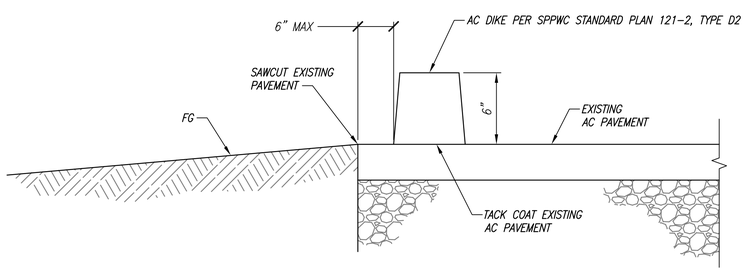

4 CB501 TYPICAL SAWCUT / AC DIKE INSTALLATION DETAIL
SCALE: NOT TO SCALE

IN CONNECTION WITH REVOCABLE PERMIT R-1185-0024: VISTA DEL MAR AT GILLIS STREET, PALACE STREET, STERRY STREET AND BOLT STREET.

IN CONNECTION WITH LADBS PLAN CHECK NO. G12LA00046

PLANS PREPARED BY:

AECOM
999 Town and Country Road
Orange CA 92868
Phone: 714.567.2501
Fax: 714.567.2441
www.aecom.com

REGISTERED PROFESSIONAL ENGINEER DONALD C. WEBER No. C71238 Exp. 12-31-13 CIVIL STATE OF CALIFORNIA 02/05/2013

CITY OF LOS ANGELES DEPARTMENT OF PUBLIC WORKS BUREAU OF ENGINEERING

LA DPW ENGINEERING Design for Tomorrow Dedicated for Future

NO.	REVISIONS:	DATE:	BY:

WORK ACCEPTED | SERIAL NO.

B - PERMITS BR402503

INDEX NO.

BUREAU OF ENGINEERING APPROVAL:
OFFICE: WEST L.A. DISTRICT
CHECKED BY: (PRINTED NAME)
SIGNATURE: DATE:

AECOM
DESIGN GROUP
ENGINEER: DONALD C. WEBER, PE
DESIGNED BY: DARCY SULZ
DRAWN BY: DARCY SULZ
CHECKED BY: DONALD C. WEBER, PE
APPROVED BY: JOHN BEHZADI, PE

VERTICAL CONTROL: BM 17-15135, NGVD29, 1985 ADJ
HORIZONTAL CONTROL: NAD 83 STATE PLANE COORDINATES, ZONE V

SHEET TITLE: CONSTRUCTION DETAILS

PROJECT: COASTAL DUNES IMPROVEMENT PROJECT

ADDRESS: 7600 BLOCK OF VISTA DEL MAR PLAYA DEL REY, CA 90293

PROJECT NO.

DRAWING NO. 16

SHEET 16 OF 18 SHEETS

THE CITY OF LOS ANGELES OR ITS OFFICERS OR AGENTS SHALL NOT BE RESPONSIBLE FOR THE ACCURACY OR COMPLETENESS OF ELECTRONIC COPIES OF THIS PLAN SHEET.

REVISION DATES: (DESIGN STAGE ONLY)

Sheet Version 4.01 2-2005

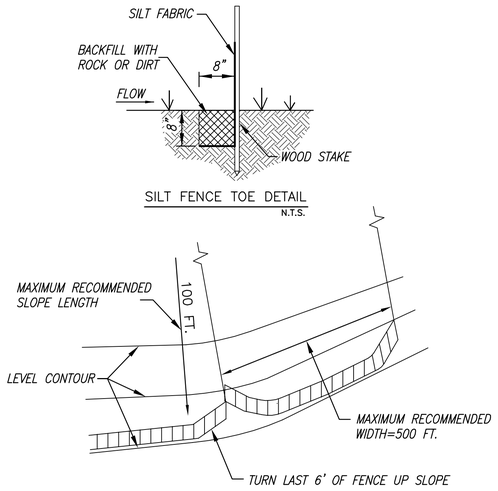

NOTES:

1. LOCATE SILT FENCE ALONG A LEVEL CONTOUR
2. MAXIMUM TRIBUTARY AREA IS 0.25 ACRE/100FT. OF SILT FENCE

1/17 SILT FENCE DETAIL
SCALE: NOT TO SCALE

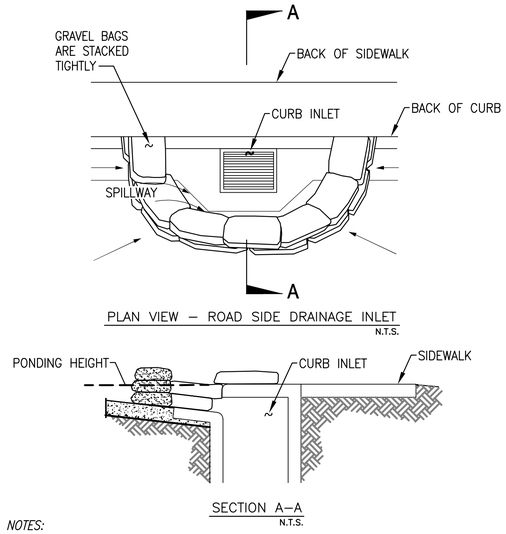

NOTES:

1. EITHER BURLAP OR WOVEN GEOTEXTILE FABRIC, ARE FILLED WITH GRAVEL, LAYERED AND PACKED TIGHTLY.
2. LEAVE ONE GRAVEL BAG GAP IN THE TOP ROW TO PROVIDE A SPILLWAY FOR OVERFLOW.
3. INSPECT BARRIERS AND REMOVE SEDIMENT AFTER EACH STORM EVENT. SEDIMENT AND GRAVEL MUST BE REMOVED FROM THE TRAVELED WAYS IMMEDIATELY.

2/17 DRAINAGE INLET PROTECTION DETAIL
SCALE: NOT TO SCALE

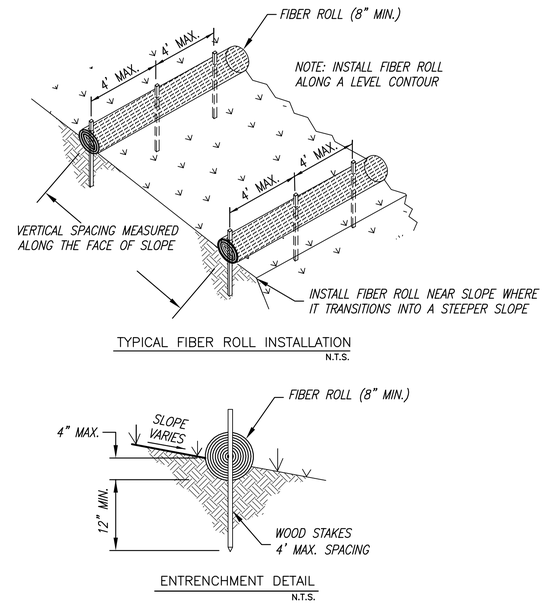

3/17 FIBER ROLL / STRAW WADDLE DETAIL
SCALE: NOT TO SCALE

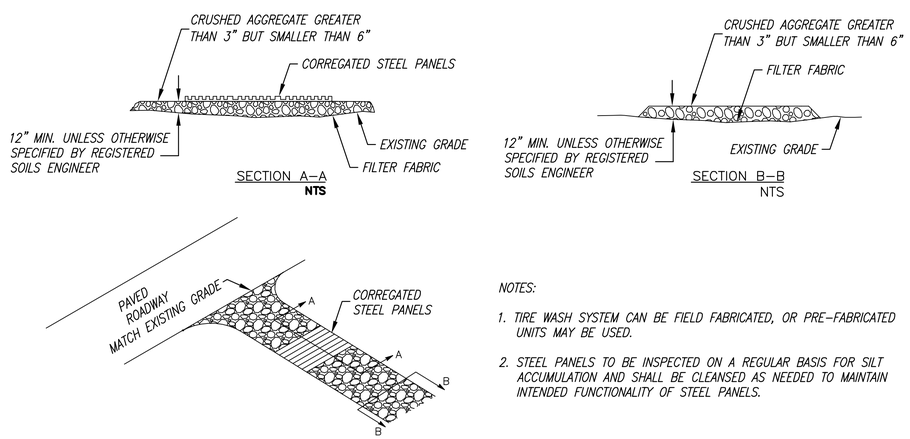

NOTES:

1. TIRE WASH SYSTEM CAN BE FIELD FABRICATED, OR PRE–FABRICATED UNITS MAY BE USED.
2. STEEL PANELS TO BE INSPECTED ON A REGULAR BASIS FOR SILT ACCUMULATION AND SHALL BE CLEANSED AS NEEDED TO MAINTAIN INTENDED FUNCTIONALITY OF STEEL PANELS.

4/17 STABILIZED CONSTRUCTION ENTRANCE / TIRE WASH OFF DETAIL
SCALE: NOT TO SCALE

IN CONNECTION WITH REVOCABLE PERMIT R-1185-0024:
VISTA DEL MAR AT GILLIS STREET, PALACE STREET, STERRY STREET AND BOLT STREET.

IN CONNECTION WITH LADBS PLAN CHECK NO. G12LA00046

REGISTERED PROFESSIONAL ENGINEER DONALD C. WEBER No. 71528 CIVIL STATE OF CALIFORNIA 02/05/2013

PLANS PREPARED BY:
AECOM
999 Town and Country Road
Orange CA 92868
Phone: 714.567.2501
Fax: 714.567.2441
www.aecom.com

THE CITY OF LOS ANGELES OR ITS OFFICERS OR AGENTS SHALL NOT BE RESPONSIBLE FOR THE ACCURACY OR COMPLETENESS OF ELECTRONIC COPIES OF THIS PLAN SHEET.

REVISION DATES (DESIGN STAGE ONLY)

Sheet Version 4.01 2-2005

BUREAU OF ENGINEERING
LA DPW ENGINEERING Design for Life Dedicated for Life

NO.	REVISIONS:	DATE:	BY:

WORK ACCEPTED | SERIAL NO.

B - PERMITS BR402503

INDEX NO.

BUREAU OF ENGINEERING APPROVAL:
OFFICE: WEST L.A. DISTRICT
CHECKED BY: (PRINTED NAME)
SIGNATURE: DATE:

BUREAU OF PUBLIC WORKS
DEPARTMENT OF PUBLIC WORKS
CITY OF LOS ANGELES

AECOM
DESIGN GROUP
ENGINEER: DONALD C. WEBER, PE
DESIGNED BY: DARCY SULZ
DRAWN BY: DARCY SULZ
CHECKED BY: DONALD C. WEBER, PE
APPROVED BY: JOHN BEHZADI, PE

VERTICAL CONTROL: BM 17-15135, NGVD29, 1985 ADJ
HORIZONTAL CONTROL: NAD 83 STATE PLANE COORDINATES, ZONE V

SHEET TITLE: BMP DETAILS

PROJECT: COASTAL DUNES IMPROVEMENT PROJECT
ADDRESS: 7600 BLOCK OF VISTA DEL MAR PLAYA DEL REY, CA 90293

PROJECT NO.
DRAWING NO. 17
SHEET 17 OF 18 SHEETS

City of Los Angeles
Department of Building and Safety
Current Version 3

Grading Pre-Inspection Report

Address: **105 E PALACE ST**
Council District: **11** Permit Application: **12030-10000-02383**

Work Description:
GPI FOR SLOPE GRADING NEAR PALACE STREET

Inspector/Telephone: **TERRY HERR, (310) 914-3937**
Inspection District: **WLA**
Inspection Date: **06/05/2012**

Property Posted: **N/A** Posting Date: **N/A** Posting Fees Paid? **No**
Tract: **TR 8557** Block: Lot(s): ARB: County Ref No: **M B 104-33/35 (SHTS 4-6)**

Approved Graded Lot: **No**	Bearing Value:
Fill Over 100 Feet: **No**	Buttress Fill: **No**
Slope of Surface:	Natural Soil Classification 1804.2:
	Cut: degrees Height: ft in
Fill: degrees Height: ft in	
Natural: degrees Height: ft in	Slide Area: **No**
Sewer Available:	PSDS Sized Per Code:
Site is Street	Roof Gutters: **No**
Condition of Street for Drainage Purposes	Recommended Termination of Drainage
Driveway Grade: **% -**	Maximum Rough Grade Allowed: **%**

	GRADING APPROVAL TO ISSUE PERMIT(S)
X	OK TO ISSUE. SEE BELOW FOR COMMENTS.
	DO NOT ISSUE UNTIL BELOW REQUIREMENTS HAVE BEEN SATISFIED.

X	1. A grading permit is required for **removal and recompaction** .
	2. A retaining wall permit is required. .
	3. OSHA permit required for **vertical cuts 5 feet or over .**
	4. All footings shall be founded in undisturbed natural soil per Code.
	5. Design for expansive soil or submit a soils report to the grading division per information bulletin P/BC 2008-116 and 91.1805.8.
	6. In the event excavations reveal unfavorable conditions, the services of a soils engineer and/or geologist may be required.
	7. **Geological and Soils** report(s) are required. Submit three copies (1 original and 2 copies), with appropriate fees, to the Grading Section for review and approval.
	8. Incorporate all recommendations of the approved Geological and Soils report(s) and Department letters dated TO COME into the plans. **Geologist and Soils Engineer** to sign plans.
	9. Site is subject to mudflow. Comply with provisions of Section 91.7014.3. Geological and soils report required.
	10. Buildings shall be located clear of the toe of all slopes which exceed a gradient of 3 horizontal to 1 vertical as per Section 91.1805.3.1.
	11. Footings shall be set back from the descending slope surface exceeding 3 horizontal to 1 vertical as per Section 91.1805.3.7.
	12. Swimming pools and spas shall be set back from descending and ascending slopes as per Section 91.1805.3.3.
	13. Department approval is required for construction of . on or over slopes steeper than 2 horizontal to 1 vertical.
	14. Provide complete details of engineered temporary shoring or slot cutting procedures on plans. Call for inspection before excavation begins.
X	15. All concentrated drainage, including roof water, shall be conducted, via gravity, to the street or an approved location at a 2% minimum. Drainage to be shown on the plans.
	16. A Registered Deputy Inspector is required.
X	17. All fill or backfill shall be compacted by mechanical means to a minimum 90% relative compaction as determined by ASTM method D-1557. Subdrains shall be provided where required by Code.
X	18. Specify on the plans: "The soils engineer is to approve the key or bottom and leave a certificate on the site for the grading inspector. The grading inspector is to be notified before any grading begins and, for bottom inspection, before fill is placed. Fill may not be placed without approval of the grading inspector."
	19. Existing non-conforming slopes shall be cut back at 2:1 (26 degrees) or retained. All concentrated drainage, including roof water, shall be conducted, via gravity, to the street or an approved location at a 2% minimum. Drainage to be shown on the plans.
X	20. All cut or fill slopes shall be no steeper the 2:1 (26 degrees).
	21. Stake and flag the property lines in accordance with a licensed survey map. .
	22. Approval required by the Department for .
	23. Approval required by the Department of Public Works, Urban Forestry Division, for native tree protected ORD. 177,040. Phone # (213) 847-3077
	24. This is a preliminary pre-inspection only - base on limited information. When complete plans (and possibly calculations and/or required reports) are submitted for a permit, a new pre-inspection and fee will be required.

** Additional requirements: **1) This Grading Pre Inspection shall be part of the approved plans. 2) No new structures per this work description.**

Construction of new occupied buildings or major additions to buildings on sites located in any of the Seismic Hazard Zones (liquefaction, Landslide or Alquist-Priolo Fault Zone) will require a geology and/or soil engineering report. For questions call (213) 482-0480.

City of Los Angeles 1

STORM WATER POLLUTION CONTROL
ATTACHMENT " A "

REV. 04/03 GGI-19

Job Address ____________ Permit # _____ - _____ - _____

Storm Water Pollution Control Requirements for Construction Activities
Minimum Water Quality Protection Requirements for All Construction Projects/Certification Statement

The following notes shall be either incorporated or attached to the approved construction/grading plans and represent the minimum standards of good housekeeping which must be implemented on all construction projects.

Construction means constructing, clearing, grading or excavation that result in soil disturbance. Construction includes structure teardown. It does not include routine maintenance to maintain original line and grade, hydraulic capacity, or original purpose of facility; emergency construction activities required to immediately protect public health and safety; interior remodeling with no outside exposure of construction material or construction waste to storm water; mechanical permit work; or sign permit work. NPDES Permit Part 5 "Definitions"

- Eroded sediments and pollutants must be retained on site and may not be transported from the site via sheet flow, swales, area drains, natural drainage course or wind.
- Stockpiles of earth and other construction-related materials must be protected from being transported from the site by wind or water.
- Fuels, oils, solvents and other toxic materials must be stored in accordance with their listing and are not to contaminate the soil nor the surface waters. All approved toxic storage containers are to be protected from the weather. Spills must be cleaned up immediately and disposed of in a proper manner. Spills may not be washed into the drainage system.
- Non-storm water runoff from equipment and vehicle washing and any other activity shall be contained at the project site.
- Excess or waste concrete may not be washed into the public way or any drainage system. Provisions shall be made to retain concrete wastes on-site until they can be appropriately disposed of or recycled.
- Trash and construction-related solid wastes must be deposited into a covered receptacle to prevent contami--nation of rainwater and dispersal by wind.
- Sediments and other materials may not be tracked from the site by vehicle traffic. The construction entrance roadways must be stabilized so as to inhibit sediments from being deposited into the public ways. Accidental depositions must be swept up immediately and may not be washed down by rain or by any other means.

As the project owner or authorized agent of the owner, I have read and understand the requirements, listed above, necessary to control storm water pollution from sediments, erosion, and construction materials, and I certify that I will comply with these requirements.

Print Name ____________
(Owner or authorized agent of the owner)

Signature ____________ Date ________
(Owner or authorized agent of the owner)

As a cover entity under Title II of the Americans with Disabilities Act, the City of Los Angeles does not discriminate on the basis of disability and, upon request, will provide reasonable accommodation to ensure equal access to its programs, services and activities. For efficient handling of information internally and in the internet, conversion to this new format of code related and administrative information bulletins including MGD and RGA that were previously issued will also allow flexibility and timely distribution of information to the public.

IN CONNECTION WITH REVOCABLE PERMIT R-1185-0024: VISTA DEL MAR AT GILLIS STREET, PALACE STREET, STERRY STREET AND BOLT STREET.

IN CONNECTION WITH LADBS PLAN CHECK NO. G12LA00046

PLANS PREPARED BY:
AECOM
999 Town and Country Road
Orange CA 92868
Phone: 714.567.2501
Fax: 714.567.2441
www.aecom.com

02/05/2013

THE CITY OF LOS ANGELES OR ITS OFFICERS OR AGENTS SHALL NOT BE RESPONSIBLE FOR THE ACCURACY OR COMPLETENESS OF ELECTRONIC COPIES OF THIS PLAN SHEET.

CITY OF LOS ANGELES DEPARTMENT OF PUBLIC WORKS BUREAU OF ENGINEERING

VERTICAL CONTROL: BM 17-15135, NGVD29, 1985 ADJ.
HORIZONTAL CONTROL: NAD 83 STATE PLANE COORDINATES, ZONE V
SHEET TITLE: LADBS GRADING PRE-INSPECTION REPORT AND ATTACHMENT 'A'
PROJECT: COASTAL DUNES IMPROVEMENT PROJECT
ADDRESS: 7600 BLOCK OF VISTA DEL MAR PLAYA DEL REY, CA 90293

AECOM DESIGN GROUP
ENGINEER: DONALD C. WEBER, PE
DESIGNED BY: DARCY SULZ
DRAWN BY: DARCY SULZ
CHECKED BY: DONALD C. WEBER, PE
APPROVED BY: JOHN BEHZADI, PE

B - PERMITS BR402503

DRAWING NO. 18
SHEET 18 OF 18 SHEETS

APPENDIX B

Results of California Natural Diversity Data Base Query

KMA

California Department of Fish and Game
Natural Diversity Database
Selected Elements by Common Name - Landscape

	Common Name	Scientific Name	Element Code	Federal Status	State Status	Global Rank	State Rank	CNPS	CDFG
1	American badger	Taxidea taxus	AMAJF04010			G5	S4		SC
2	Ballona cinquefoil	Potentilla multijuga	PDROS1B120			GX	SX	1A	
3	Belding's savannah sparrow	Passerculus sandwichensis beldingi	ABPBX99015		Endangered	G5T3	S3		
4	Belkin's dune tabanid fly	Brennania belkini	IIDIP17010			G1G2	S1S2		
5	Brand's star phacelia	Phacelia stellaris	PDHYD0C510	Candidate		G2?	S1	1B.1	
6	Braunton's milk-vetch	Astragalus brauntonii	PDFAB0F1G0	Endangered		G2	S2	1B.1	
7	Busck's gallmoth	Carolella busckana	IILEM2X090			G1G3	SH		
8	California Orcutt grass	Orcuttia californica	PMPOA4G010	Endangered	Endangered	G2	S2.1	1B.1	
9	California black rail	Laterallus jamaicensis coturniculus	ABNME03041		Threatened	G4T1	S1		
10	California brown pelican	Pelecanus occidentalis californicus	ABNFC01021	Delisted	unknown code...	G4T3	S1S2		
11	California least tern	Sternula antillarum browni	ABNNM08103	Endangered	Endangered	G4T2T3Q	S2S3		
12	Coulter's goldfields	Lasthenia glabrata ssp. coulteri	PDAST5L0A1			G4T3	S2.1	1B.1	
13	Davidson's saltscale	Atriplex serenana var. davidsonii	PDCHE041T1			G5T2?	S2?	1B.2	
14	Dorothy's El Segundo Dune weevil	Trigonoscuta dorothea dorothea	IICOL51021			G1T1	S1		
15	El Segundo blue butterfly	Euphilotes battoides allyni	IILEPG201B	Endangered		G5T1	S1		
16	El Segundo flower-loving fly	Rhaphiomidas terminatus terminatus	IIDIP05022			G1T1	S1		
17	Gambel's water cress	Nasturtium gambelii	PDBRA270V0	Endangered	Threatened	G1	S1	1B.1	
18	Gertsch's socalchemmis spider	Socalchemmis gertschi	ILARAU7010			G1	S1		
19	Henne's eucosman moth	Eucosma hennei	IILEM0R390			G1	S1		
20	Lange's El Segundo Dune weevil	Onychobaris langei	IICOL4W010			G1	S1		
21	Los Angeles sunflower	Helianthus nuttallii ssp. parishii	PDAST4N102			G5TH	SH	1A	
22	Orcutt's pincushion	Chaenactis glabriuscula var. orcuttiana	PDAST20095			G5T1	S1	1B.1	
23	Pacific pocket mouse	Perognathus longimembris pacificus	AMAFD01042	Endangered		G5T1	S1		SC
24	Palos Verdes blue butterfly	Glaucopsyche lygdamus palosverdesensis	IILEPG402A	Endangered		G5T1	S1		
25	Parish's brittlescale	Atriplex parishii	PDCHE041D0			G1G2	S1.1	1B.1	
26	Salt Spring checkerbloom	Sidalcea neomexicana	PDMAL110J0			G4?	S2S3	2.2	
27	San Bernardino aster	Symphyotrichum defoliatum	PDASTE80C0			G2	S2	1B.2	
28	San Fernando Valley spineflower	Chorizanthe parryi var. fernandina	PDPGN040J1	Candidate	Endangered	G2T1	S1.1	1B.1	
29	Santa Barbara morning-glory	Calystegia sepium ssp. binghamiae	PDCON040E6			G5TH	SH	1A	
30	South Coast saltscale	Atriplex pacifica	PDCHE041C0			G3G4	S2.2	1B.2	
31	Southern Coastal Salt Marsh	Southern Coastal Salt Marsh	CTT52120CA			G2	S2.1		
32	Southern Dune Scrub	Southern Dune Scrub	CTT21330CA			G1	S1.1		
33	Southern Sycamore Alder Riparian	Southern Sycamore Alder Riparian	CTT62400CA			G4	S4		

	Common Name	Scientific Name	Element Code	Federal Status	State Status	Global Rank	State Rank	CNPS	CDFG
	Woodland	Woodland							
34	Ventura Marsh milk-vetch	Astragalus pycnostachyus var. lanosissimus	PDFAB0F7B1	Endangered	Endangered	G2T1	S1	1B.1	
35	aphanisma	Aphanisma blitoides	PDCHE02010			G3G4	S3	1B.2	
36	bank swallow	Riparia riparia	ABPAU08010		Threatened	G5	S2S3		
37	beach spectaclepod	Dithyrea maritima	PDBRA10020		Threatened	G2	S2.1	1B.1	
38	burrowing owl	Athene cunicularia	ABNSB10010			G4	S2		SC
39	coast horned lizard	Phrynosoma blainvillii	ARACF12100			G4G5	S3S4		SC
40	coastal California gnatcatcher	Polioptila californica californica	ABPBJ08081	Threatened		G3T2	S2		SC
41	coastal dunes milk-vetch	Astragalus tener var. titi	PDFAB0F8R2	Endangered	Endangered	G1T1	S1	1B.1	
42	coastal goosefoot	Chenopodium littoreum	PDCHE091Z0			G2	S2	1B.2	
43	globose dune beetle	Coelus globosus	IICOL4A010			G1	S1		
44	hoary bat	Lasiurus cinereus	AMACC05030			G5	S4?		
45	marsh sandwort	Arenaria paludicola	PDCAR040L0	Endangered	Endangered	G1	S1	1B.1	
46	mesa horkelia	Horkelia cuneata ssp. puberula	PDROS0W045			G4T2	S2.1	1B.1	
47	mimic tryonia (=California brackishwater snail)	Tryonia imitator	IMGASJ7040			G2G3	S2S3		
48	monarch butterfly	Danaus plexippus	IILEPP2010			G5	S3		
49	mud nama	Nama stenocarpum	PDHYD0A0H0			G4G5	S1S2	2.2	
50	pallid bat	Antrozous pallidus	AMACC10010			G5	S3		SC
51	pocketed free-tailed bat	Nyctinomops femorosaccus	AMACD04010			G4	S2S3		SC
52	prostrate vernal pool navarretia	Navarretia prostrata	PDPLM0C0Q0			G2	S2	1B.1	
53	salt marsh bird's-beak	Chloropyron maritimum ssp. maritimum	PDSCR0J0C2	Endangered	Endangered	G4?T2	S2.1	1B.2	
54	sandy beach tiger beetle	Cicindela hirticollis gravida	IICOL02101			G5T2	S1		
55	senile tiger beetle	Cicindela senilis frosti	IICOL02121			G4T1	S1		
56	silver-haired bat	Lasionycteris noctivagans	AMACC02010			G5	S3S4		
57	south coast marsh vole	Microtus californicus stephensi	AMAFF11035			G5T1T2	S1S2		SC
58	southern California saltmarsh shrew	Sorex ornatus salicornicus	AMABA01104			G5T1?	S1		SC
59	southern steelhead - southern California DPS	Oncorhynchus mykiss irideus	AFCHA0209J	Endangered		G5T2Q	S2		SC
60	southern tarplant	Centromadia parryi ssp. australis	PDAST4R0P4			G4T2	S2	1B.1	
61	southwestern willow flycatcher	Empidonax traillii extimus	ABPAE33043	Endangered	Endangered	G5T1T2	S1		
62	spreading navarretia	Navarretia fossalis	PDPLM0C080	Threatened		G1	S1	1B.1	
63	tricolored blackbird	Agelaius tricolor	ABPBXB0020			G2G3	S2		SC
64	two-striped garter snake	Thamnophis hammondii	ARADB36160			G3	S2		SC
65	wandering (=saltmarsh) skipper	Panoquina errans	IILEP84030			G4G5	S1		

	Common Name	Scientific Name	Element Code	Federal Status	State Status	Global Rank	State Rank	CNPS	CDFG
66	western mastiff bat	Eumops perotis californicus	AMACD02011			G5T4	S3?		SC
67	western pond turtle	Emys marmorata	ARAAD02030			G3G4	S3		SC
68	western snowy plover	Charadrius alexandrinus nivosus	ABNNB03031	Threatened		G4T3	S2		SC

EXHIBIT G

Los Angeles
World Airports

CONSULTANT / CONTRACTOR RELOCATION & TRAVEL REIMBURSEMENT POLICY

Prepared March 12, 2010

Los Angeles World Airports (LAWA) will utilize in-house staff and City resources whenever feasible to meet the department's mission and business goals. Due to the unique nature of the aviation market, LAWA will always have a need to secure the services of experts in fields such as, but not limited to, airport engineering, architecture, planning, and financial services. As many of these aviation-related services are highly specialized, local resources may not be readily available for deployment to LAWA.

Purpose

It is the policy of LAWA to allow for the reimbursement of consultant/contractor relocation and travel expenses when it is determined that such reimbursement assists in the furtherance of official city business goals and/or increases revenue for LAWA. City Administrative Code Section 4.242.2(h) states, "...official city business is constituted as and shall demonstrate: (1) a valid City interest to be served or gained thereby; (2) relevance to the City operations or the individual's role in such operations; (3) the promotion or development of City programs, methods or administration; or (4) compliance with instructions or authorization of the Mayor or the City Council." It is expected in each instance that a consultant/contractor will only incur expenses that a reasonable and prudent person would incur if traveling on personal business.

Consultant / Contractor Relocation

When expert services are required for extended periods of time, LAWA may, on a case-by-case basis, provide reimbursement for relocation of the individuals assigned through the contract provisions which specify the terms and conditions for such reimbursement. All requests for relocation reimbursement must be submitted prior to the contemplated move and must receive advance written approval from the LAWA authorized signer as designated in the contract document. Reimbursement shall be based upon a negotiated lump sum mutually agreed upon by LAWA and the contractor. LAWA has developed the attached ""Guidelines for Negotiating Consultant/Contractor Relocation, Travel & Other Reimbursable Expenses" to promote consistency and reasonableness in the negotiation of these lumps sums across the various divisions within the department.

Consultant / Contractor Travel & Related Expenses

Not all individuals providing expert services will be required on a full-time basis or for a duration that warrants relocation. LAWA policy allows for the reimbursement of consultant/contractor travel and related expenses provided that the contract documents include a provision for project-related travel expenses for the furtherance of work. Prior written approval by an authorized LAWA signer is required specifically utilizing a Task Order, Personnel Authorization, or Travel Authorization as designated in the contract language. It is expected that before such authorization is granted, due consideration shall be given to such factors as suitability, level of

seniority in field of expertise, specialty discipline; and nature of the business involved.

Reimbursement Methodologies

LAWA policy allows for the reimbursement of travel and other Reimbursable Costs, in accordance with one of two methodologies as listed below. The methodology, or combination thereof, shall be described within the specific contract language and shall cover all allowable travel-related expenses based on the attached LAWA Guidelines for Negotiating Consultant/Contractor Relocation, Travel & Other Reimbursable Expenses.

I. Actual Costs for Airfare/Transit Expenses plus All-Inclusive Flat Rate Per Diem

In cases where contractor travel is required for a limited duration LAWA may authorize a contractor to receive reimbursement of **airfare and transit expenses based upon submission of actual receipts.** Ground transportation shall include car rental, taxi service, or other public transportation expenses.

- Rental Automobiles - Because of their cost, rental automobiles shall be used only when their use will affect a savings or other advantage, or when the use of other transportation is not feasible. Rental automobiles should be limited to compact models when available. A legible copy of the automobile rental agreement is required. Rental of other than compact automobiles is allowable when compacts are not available or if more than two staff members are in the travel status. All rental cars will be returned with a full tank of gas when possible. Fuel charges will be reimbursed at the market price. Unreasonable or excessive fuel charges by the rental car agency may not be reimbursed.

All other expenses shall be covered by an **all-inclusive flat rate per diem** to include but not be limited to the following:

- Lodging to include hotel/motel or corporate housing
- Meal allowance which covers meals and incidental expenses
- Fees and tips given to porters, baggage carriers, bellhops, hotel maids/servants, stewards or stewardesses, and others
- Personal vehicle expenses including mileage reimbursement
- Parking fees
- Laundry and dry cleaning
- Personal office supplies

The all-inclusive per diem rate will be applied in accordance with the limits established by the City Controller and *shall not exceed* the per diem published in the City Administrative Officer's (CAO) Department Budget Manual, Travel Allowances – Air Fare and Per Diem. As the per diem is periodically updated by the CAO, reimbursement shall be made based upon the per diem rate published at the time expenses are incurred.

Under this methodology, LAWA will not require submission of actual receipts for per diem expenses but will require verification of travel status in the form of airfare or transit receipts. Airfare and transit expenses, including car rental, will be reimbursed based upon actual receipts.

II. Travel-Related Reimbursement Factor

This methodology shall be applied when the frequency of travel is known and forecasting of expenditures can be made with a certain level of predictability. Utilizing this methodology, LAWA may negotiate a travel-related reimbursement factor, based upon the attached Guidelines for Negotiating Consultant / Contractor Relocation, Travel & Other Reimbursable Expenses, to be applied against the consultant/contractor's raw billing rate (non-burdened). This factor must be authorized by a LAWA signer and detailed on a Task Order, Personnel Authorization, or Travel Authorization as designated in the contract language. The authorizing document shall specify the time period for which this approval is granted.

Under this methodology, LAWA will not require submission of actual receipts for reimbursement factor but will require verification of travel status in the form of airfare or transit receipts.

Acceptable Documentation for Verification of Travel Status
(Required for both Reimbursement Methodologies)

Transit	Airfare or transit receipt such as the "Passenger Ticket", invoice, itinerary, "electronic ticket" or confirmation notice or other documentation reflecting the dates of travel and boarding passes.
Lodging	Hotel/motel invoice reflecting zero balance, or that the balance is subject to credit card payment (i.e. in case of "express check-out", where the hotel expenses will automatically be applied to the traveler's credit card).

Los Angeles
World Airports

Guidelines for Negotiating Consultant/Contractor Relocation, Travel & Other Reimbursable Expenses

The following are suggested guidelines for the negotiation of Relocation and Travel-Related Reimbursement Factors.

Relocation Expenses

- The Consultant/Contractor shall obtain at least three bids from reputable moving companies for the cost of moving. LAWA will reimburse for the lowest of the three bids.
- The actual cost shall include the cost of packing, moving, and unpacking of household goods performed by a reputable moving company as determined by the bidding process. It may also encompass the storage of the aforementioned household goods for a period not to exceed thirty days. The cost of moving the household items from a storage facility to a residential location will be included in the reimbursable amount.
- To transport up to two automobiles, LAWA will pay for the less expensive of these two options: 1) one-time, one-way mileage cost; or 2) cost of shipping/transporting the automobile(s) by other means. If applicable, mileage costs reimbursed for driving up to two automobiles for a one-time, one-way trip will be paid at the rate then currently in effect for the mileage reimbursement for the use of private cars by City employees.
- LAWA will reimburse the Consultant/Contractor for incurred interim lodging expenses not to exceed thirty days.
- LAWA will not reimburse for a household relocation less than 100 miles.
- LAWA will not reimburse expenses related to housing research and acquisition.
- LAWA will not reimburse expenses for Consutant / Contractor's family travel or lodging.

Travel-Related Expenses

I. Allowable Travel Expenses

A. Transportation

1. *Air Travel*
Air travel expenses are allowable only for the lowest regular fare available for regularly scheduled airlines for the date and time selected. Official travel shall be by the most direct routing and Consultant / Contractor shall maximize savings whenever possible including advance purchase options. LAWA will reimburse for the price of coach class, unrestricted ticket. When possible, economy or special fares are to be used. Reimbursement must be supported by legible copies of airline tickets and boarding passes. Electronic tickets and boarding passes are acceptable.

a) Checked Baggage Fees

In the cases where the traveler is charged for the first checked bag, LAWA will reimburse for this fee. Baggage fees for additional items will not be automatically reimbursed unless a justification for a business need is provided. Checked baggage fees are considered a separate reimbursement expense and are not included as part of the per diem.

b) *Advanced Reservations & Change Fees*
Consultant/Contractor, when possible, should make every effort to make the reservation well in advance to be able to get the best price possible. LAWA shall only reimburse for reservation change fees when the schedule change was requested by LAWA and is supported by documentation confirming LAWA's direction of schedule change.

c) *Non-Allowable Expenses*
Comfort items such as paying for exit row seats or service upgrades are not allowable.

2. *Ground Transportation Expenses*
The least expensive and most practical form of public transportation shall continue to be reimbursed taking into consideration such factors as time and availability. Ground transportation is defined as travel from home to airport and back and from airport to LAWA business location and back. Transportation in acquiring meals **will not** be reimbursed. This expense is considered an incidental expense as discussed under Item 2b below and will be covered by the daily meal and incidental allowance.

For travel to locations other than LAX, prior written authorization is required and reimbursement of expenses shall be computed based upon the City's Administrative Officer's published index listed for the destination and all conditions are noted above will apply. Only those employees approved may submit travel expenses for reimbursement.

a) Local Transportation - Local transportation costs incurred by Consultant/Contractor while in travel status will be reimbursed as follows:

- Taxi/limousine/LAWA bus - Reimbursable at actual cost.

- Rental Automobiles - Because of their cost, rental automobiles shall be used only when their use will affect a savings or other advantage, or when the use of other transportation is not feasible. Rental automobiles should be limited to compact models when available. A legible copy of the automobile rental agreement is required. Rental of other than compact automobiles is allowable when compacts are not available or if more than two staff members are in the travel status. All rental cars will be returned with a full tank of gas when possible. Fuel charges will be reimbursed at the market price. Unreasonable or excessive fuel charges by the rental car agency may not be reimbursed.

- Private Automobile - Use of private or Consultant/Contractor-owned or leased automobiles will be reimbursed at the rate permitted under the Internal Revenue Service published rates as applicable to such costs.

- Tolls and parking, excluding valet, charges - for use of ferries, roads, bridges, and tunnels while traveling to and from commercial carriers and parking charges at origination/destination are reimbursable at cost.

b) Local Travel - Travel to and from the Site for Home Office Staff who are located in any of the Consultant/Contractor's office locations in the Los Angeles Vicinity is not reimbursable without prior written approval by LAWA.

B. Lodging & Meal Allowance

A per diem may be used to reimburse Consultant/Contractor for overnight accommodations and meals when in travel status on behalf of LAWA. If Consultant/Contractor's internal policy is a lower rate, the lower rate will be used. The per diem rate will be applied as a *meal allowance*, in accordance with the limits established by the City Controller, *plus actual costs for lodging.* The combined total amount of the meal allowance and actual lodging *shall not exceed* the per diem published in the City Administrative Officer's (CAO) Department Budget Manual, Travel Allowances – Air Fare and Per Diem. As the per diem is periodically updated by the CAO, reimbursement shall be made based upon the per diem rate published at the time expenses are incurred. The per diem includes lodging and a meal allowance which covers meals and incidental expenses for one full day.

In the selection of restaurants and lodging, it is expected that individuals will seek moderately priced establishments of acceptable quality.

1) Lodging

An individual must consider transportation costs, time and other relevant factors in selecting the most economical and practical accommodations. Receipts are required and will be reimbursed based on actual cost incurred in an amount not to exceed the per diem less the meal allowance. Lodging expenses will be reimbursed only at the single occupancy rate.

- Hotel Accommodations – Consultant/Contractors will be required to select a hotel/motel within the City of Los Angeles limits. In cases where rates have been negotiated with the hotel properties surrounding its airports, LAWA will make this listing available for the consultant's considerations. Approval of properties not on the negotiated list will be evaluated based upon competitive rates.

- Corporate Housing & Other Leasing Options- For traveling employees assigned to the Site on a regular basis, the Consultant may utilize internal policies, such as use corporate apartments, to determine the most cost effective lodging. Prior to leasing or procuring such lodging, the Consultant shall perform a lease versus per diem analysis and provide to LAWA for review and concurrence.

2) Meal & Incidental Allowance

a) The meal allowance rate includes incidental expenses defined as follows:

1. Fees and tips given to porters, baggage carriers, bellhops, hotel maids/servants, stewards or stewardesses and others.

2. Transportation in acquiring meals (this does not include transportation from home to airport and from airport to LAWA business location and back).

3. Personal vehicle expenses including mileage reimbursement

4. Parking fees

5. Laundry and dry cleaning

6. Personal office supplies

b) For international travel, meal and incidental allowances will be provided according to the per diem rate guideline established by the City of Los Angeles Controller's Office as found on their intranet under Guides to Departments/Travel/Reference/federal per diem.

c) Meal and incidental allowance will be prorated at 75% of the daily allowance as follows:

- On the first day of travel, if flight leaves after 2 PM;
- On the last day of travel, if flight arrives before 2 PM;
- When some meals are provided as part of the LAWA project business.

Note: No meal allowance will be provided when meals are provided throughout the day by the host or as part of a conference/business event.

d) Meal receipts **do not** have to be presented to receive the meal and incidental allowance per day of business travel except for grant funded travels where the grantor requires complete documentation of travel expenses.

e) Gratuities are limited to no more than 15% and will now be included as part of the Meal and Incidental Allowance. There will be no additional reimbursement for gratuities.

II. Non-Reimbursable Travel Costs

A. First-class airfare.

B. Air flight insurance

C. Expense of any insurance offered by the auto rental company, such as Collision Damage Waiver, Personal Accident Insurance, Liability Insurance Supplement, Personal Effects Coverage, Supplemental Liability Protection, etc. in connection with a rented vehicle.

D. Auto repairs, replacement or towage to personal vehicle when such use has been authorized.

E. Valet parking when self parking is available.

F. Expenses above the meal allowance shall not be reimbursed even if supported by receipts.

G. Meals and incidental expenses in excess of the set domestic stipend or international federal per diem allowance will **not** be reimbursed.

H. Reimbursements for LAWA employee's meals are not allowable, except in accordance with City policy.

I. Alcoholic beverages.

J. Expenses for persons other than the consultant authorized for travel. Expenses incurred by a dependent or other person accompanying the Consultant employee on an official business trip are not allowable. Bills indicating multiple occupants are to be adjusted to single occupancy rate and disallowed unless disclosure is made indicating reason, names, and dates.

K. Expenses of a purely personal nature.

III. Allowable Direct Costs

A.. Telephone - Actual cost of business telephone charges, subject to the limits on EMobile charges described below, incurred by Consultant while in travel status is reimbursable. Personal telephone charges are not allowable.

B. EMobile Communication Devices – At actual cost for acquisition all devices combined such as cell phones, pagers, radios, etc. in an amount not to exceed $100 per authorized individual. (Job site radio systems are not included in this limit). Unneccessary and/or unreasonable charges such as roaming fees, except roaming fees incurred while in approved travel status, roadside assistance, home long distance, text messaging or any other such feature that is not essential to the individuals job function will not be reimbursed. LAWA reserves the right to limit the number of individuals allowed to bill for mobile communication devices. LAWA will not reimburse for personal calls.

C. Office Supplies – At actual cost for supplies for the benefit of the project or program. Supplies to be consumed solely by the individual are not allowable.